KLAROMED

POLISH MANUFACTURER
MEDICAL EQUIPMENT

CATALOG 2022

11 YEARS OF BUSINESS

KLAROMED

Clear and transparent mission for medicine

We are a rapidly growing company, active in the medical sector. We attach a great importance to the high quality of our services. We have several years of experience in the production and installation of medical devices. Our flagship product is "INTEGRATOR" a system for video recording and video transmission in integrated operating rooms. We have already made more than 50 installations of our system in the Polish health care institutions. The leading realization of the system was the integration of the first and so far the only Da Vinci operating robot in Poland at the Regional Specialist Hospital in Wroclaw.

In order to meet the requirements posed by the modern surgery and each of its disciplines, we have developed an innovative solution - operating lamps "PLUS LED", manufactured by our company. They were designed by Polish engineers in order to maximize the comfort and the ergonomics of the surgeon work. Our manufacturing offer has been supplemented by the medical furniture – "KLAROLINE", which is produced by our company in various performance technologies.

In order to complement our direct sales offer, we also import and distribute a lot of supplementary medical devices, manufactured by our European partners. We sell comprehensive solutions for the decontamination of HPV by a gaseous form of hydrogen peroxide, offered by the English company BIOQUELL. As regards the operating tables, we are an exclusive distributor of the renowned Swiss company Schaerer Medical AG. The representation of such reputable European manufacturers of medical equipment is a significant distinction for us.

We supply not only devices but also complete solutions that perfectly facilitate the work of doctors and provide comfortable and fast treatment at the highest level to patients.

We employ young, energetic and highly qualified personnel which is able to pursue the assumptions of our mission. When we serve our customers with advice and assistance, we are able to build a confidence through commitment, customization, counseling and competency readiness. The satisfaction of our clients is our paramount value. The constant growth, the versatile competences and the belief in final success are the strength of our company.

Thanks to the close cooperation with domestic and foreign partners, world leaders in the production of medical equipment, we can offer our customers a wide range of products of the highest quality. We offer a complete range of products and services, necessary for every hospital, clinic or palliative care center. The transparent cooperation and reliability – on this base we want to build our reputation as your friend on the demanding market of medical services.

Certificate

Quality Management System
EN ISO 13485:2016

We invite you to cooperation.
CEO
Tadeusz Książek

Quality Management System
EN ISO 13485:2016

medical products catalog

Operating and examination lamps 4
Integration system for operating blocks 38
Operating Tables 50
Gynecology & Obstetrics 82
Decontamination - solutions to combat with COVID-19 92
Medical furniture made of powder-coated steel 98
Medical metal furniture with body based on aluminium profile 122
Medical metal furniture with ECO body 138
Medical furniture made of stainless steel AISI 304 156
Additional equipment for furniture 176
Mobile medical furniture 186

KLAROMED

polish manufacturer
LED surgery lamps

Operating
and examination lamps

Manufacturer

KLAROMED

Features of plusLED PREMIUM and plusLED PLUS PREMIUM lamps 6
Operating lamp plusLED 96 premium 10
Operating lamp plusLED 96 premium 11
Operating lamp plusLED 96 plus premium 12
Operating lamp plusLED 56 plus premium 13
PlusLED lamps with video system and operating room integration system 14
PlusLED PREMIUM and plusLED PLUS PREMIUM lamps with a video camera system 16
Sets of operating and examination lamps plusLED PREMIUM and plusLED PLUS PREMIUM in the ceiling version 17
PlusLED examination lamps in wall-mounted version 18
PlusLED examination lamps in a mobile version 18
Properties of plusLED 96 ECO and 56 ECO and plusLED 96 PLUS ECO and 56 PLUS ECO lamps 20
Operating lamp plusLED 96 ECO 22
Operating lamp plusLED 56 ECO 23
Operating lamp plusLED 96 plus ECO 24
Operating lamp plusLED 56 plus ECO 25
Sets of operating and examination lamps in the ceiling version ... 26
Sets of examination lamps in the wall and mobile version 28
Examination lamp 37 ECO 30
Examination lamp plusLED 24 ECO 32
Examination lamp plusLED 7 ECO 34

Features of plusLED PREMIUM and plusLED PLUS PREMIUM lamps

To meet the needs of modern surgery and each of its specialties, we have created an innovative solution such as plusLED PREMIUM lamps (with a constant colour temperature) and plusLED PLUS PREMIUM (with colour temperature adjustment). Lamps provide precise light wherever it is necessary.

The homogeneous nature of the light increases the comfort of the surgeon's work in every place of the extensive operating field. Both lamp lines are characterized by extremely low heat emission towards the operating field.

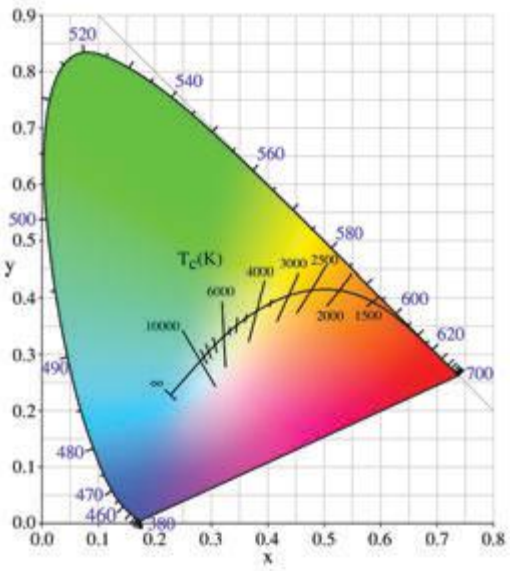

The main task of operating lamps is to accurately reproduce the colour spectrum of the operating field

The plusLED PREMIUM and plusLED PLUS PREMIUM lamps perfectly reproduce colours, which allows surgeons to observe more important details in the operating field.

The smallest nuances of the tissue colour can be seen thanks to very high colour rendering indexes (Ra), red colour (R9) and skin colour (R13).

The colour spectrum of the operating field is reproduced naturally. The delicate and precise light of the operating lamp is friendly and comfortable for the operator's eyes. White LED diodes used in the construction of the device are fifth generation diodes with an impressive lifetime measured in tens of thousands of hours and years of uninterrupted lighting.

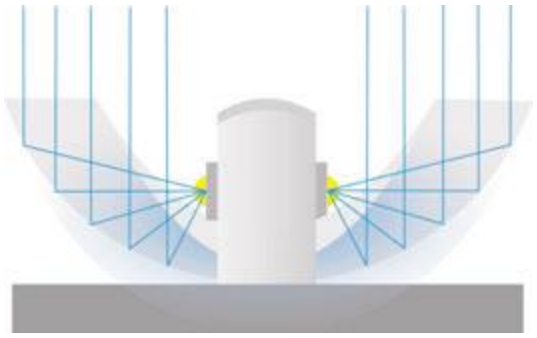

PlusLED PREMIUM and plusLED PLUS PREMIUM lamps are the best devices in this technology on the market.

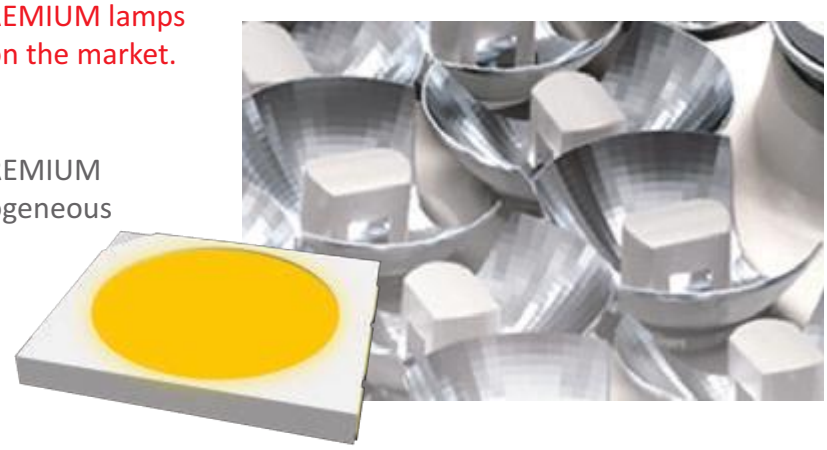

One of the differences between the plusLED PREMIUM and plusLED PLUS PREMIUM lamp lines is the way of creating a homogeneous light beam and eliminating shadows in the operating field. In the first one, the shadow-free effect is achieved thanks to the use of multifaceted reflectors,

in the second, thanks to special lenses that provide very high shadow reduction parameters and prevent distortion of the light beam without the need to use complicated and often unreliable electronic systems.

The solution used in the plusLED PREMIUM line provides a homogeneous operating field with optimal white light and a constant colour temperature of 4,900 K.

On the other hand, the plusLED PLUS PREMIUM line lamps allow you to adjust the colour temperature in five steps in a very wide range from 3500K to 5500K, allowing operators to work with warm, neutral and cold white light, depending on individual preferences.

In order to maintain the highest standards, the plusLED PREMIUM and plusLED PLUS PREMIUM operating lamps are equipped with a wide range of light intensity regulation and the AMBI endoscopic lighting function.

The main advantage of the operating lamps of both series is the dual-function, central sterile handle that allows the operator to regulate not only the diameter of the illuminated field, but also the intensity of the lighting. This is a novelty in the field of ergonomics of the surgeon's work while maintaining his sterile operating area.

In order to improve the comfort of work, the lamps are equipped with a double control system.

The first one is located in a sterile handle. The second control system is located on the ESG safety glass panel in the side zone at the edge of the dome (plusLED PREMIUM line) or on the control panel nearby the dome (plusLED PLUS PREMIUM line).

The central handle is complemented by matching sterile overlays with the possibility of steam sterilization at a temperature of 134 ° C. The overlays are equipped with a blockade that securely fixes them in the right place, and also allows for instant replacement. They have been ergonomically modelled, so they fit well in the hand. This makes it easier for the surgeon to use the operating lamp.

The safety glass ESG used in the construction of the lamp is resistant to breakage and scratches. The compact design of the lamp increases efficiency and ergonomics and enables the use of lamps in a wide range of surgical specialties, and at the same time facilitates the maintenance of the lamp in perfect cleanliness.

The lamp housing is made of light aluminum alloys. It is a material that guarantees shock resistance and a long service life.

The heat emitted by the lighting elements is dissipated through the upper part of the housing towards the ceiling, thanks to which a negligible amount of heat is directed towards the surgeon's head and shoulders.

The dome has a unique in the world ultra-thin and compact structure.

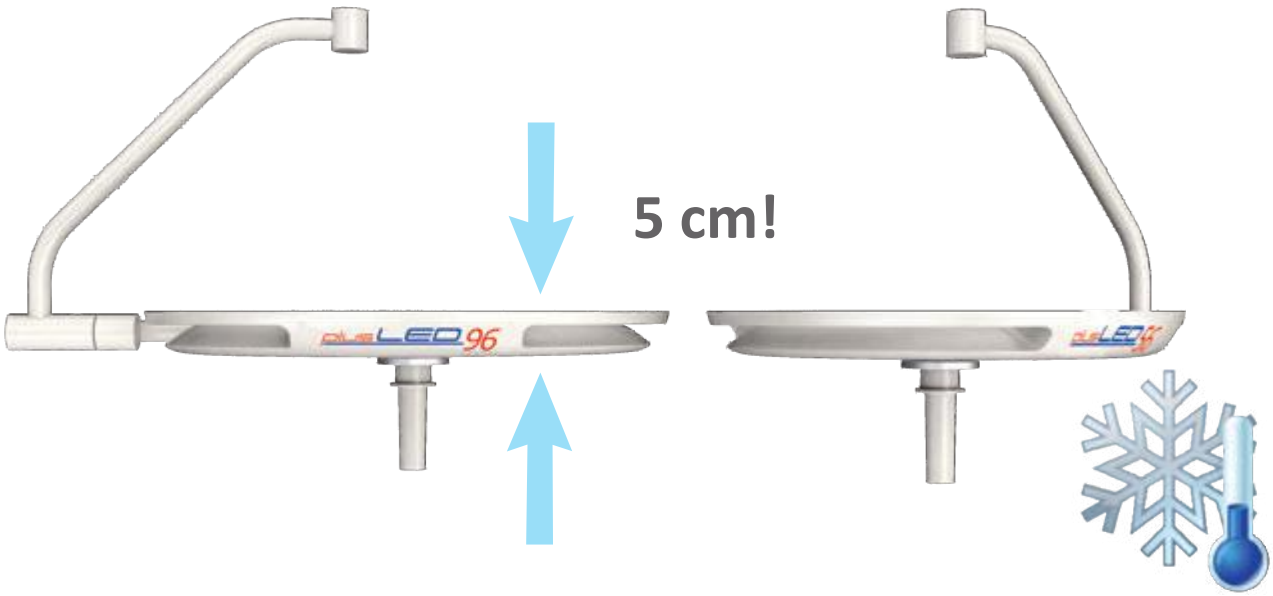

The streamlined shape of the lamps is perfect for class 1A operating theatres, equipped with laminar air vents. The air flows around the profiled lamp housing, without causing turbulence and ensuring good cooperation in the laminar flow.

plusLED 96 premium

Operating lamp plusLED 96 PREMIUM:

- illuminance 160,000 lux at a distance of 1 meter
- regulation of lighting intensity in the range of 40,000 - 160,000 lux
- constant colour temperature of 4900 K
- operating field diameter 160-360 mm
- depth of illumination 1400 mm
- power consumption 45 W

KLAROMED manufacturer

The lamp is available in a mobile configuration, a mobile with a battery, a single wall and ceiling configuration, and as a combination of two or three domes. The combination of domes can consist of plusLED 96 PREMIUM or plusLED 96 PREMIUM and plusLED 56 PREMIUM headlights.
It is possible to mount an HD camera in the dome and a monitor on the third suspension arm.

plusLED premium 56

Operating lamp plusLED 56 PREMIUM:

- illuminance of 130,000 lx at a distance of 1 meter
  (available on request with an illuminance of 160,000 lx)
- lighting intensity adjustment in the range of 40,000 - 130,000 (160,000) lux
- constant colour temperature of 4900 K
- operating field diameter 140-320 mm
- depth of illumination1400 mm
- power consumption 35 W

KLAROMED manufacturer

The lamp is available in a mobile configuration, a mobile with a battery, a single wall and ceiling configuration, and as a combination of two or three domes.The combination of domes can consist of plusLED 56 PREMIUM or plusLED 56 PREMIUM and plusLED 96 PREMIUM headlights.
It is possible to mount an HD camera in the dome and a monitor on the third suspension arm.

plusLED 96 plus premium

Operating lamp plusLED 96 PLUS PREMIUM:

- illuminance 160,000 lux at a distance of 1 meter
- regulation of lighting intensity in the range of 40,000 - 160,000 lux
- colour temperature adjustable in 5 steps in the range of 3500K-5500K
- operating field diameter 160 - 360 mm
- depth of illumination 1750 mm
- power consumption 35 W

KLAROMED manufacturer

The lamp is available in a mobile configuration, a mobile with a battery, a single wall and ceiling configuration, and as a combination of two or three domes. The combination of domes can consist of plusLED 96 PLUS PREMIUM or plusLED 96 PLUS PREMIUM and plusLED 56 PLUS PREMIUM.
It is possible to mount an HD camera in the dome and a monitor on the third suspension arm.
.

plusLED 56 plus premium

Operating lamp plusLED 56 PLUS PREMIUM:

- illuminance of 130,000 lx at a distance of 1 meter
  (available on request with an illuminance of 160,000 lx)
- lighting intensity adjustment in the range of 40,000 - 130,000 (160,000) lux
- colour temperature adjustable in 5 steps in the range of 3500K-5500K
- operating field diameter 140-320 mm
- depth of illumination 1750 mm
- power consumption 26 W

KLAROMED manufacturer

The lamp is available in a mobile configuration, a mobile with a battery, a single wall and ceiling configuration, and as a combination of two or three domes. The combination of domes can consist of plusLED 56 PLUS PREMIUM or plusLED 56 PLUS PREMIUM and plusLED 96 PLUS PREMIUM headlights. It is possible to mount an HD camera in the dome and a monitor on the third suspension arm.

PlusLED lamps with video system and operating room integration system

Two-camera operating lamp plusLED 96 HDTV / 96 / ARM / ARM with INTEGRATOR system
Cat. No. K00150 (PREMIUM VERSION)
Cat. No. K00450 (PLUS PREMIUM VERSION)

The world's first operating lamp with a dual-camera system

The plusLED operating lamps are the world's first lamps with a two-camera system. The lamp is equipped with two HDTV-quality cameras and the INTEGRATOR system that enables the activation of the function of two-channel video recording from the installed cameras. In addition to recording, the INTEGRATOR system also offers video transmission and connection to the local RIS radiological system. By touching a button on the screen of the 24 ”control unit, you can record video. The material obtained in this way can be later completed on various data carriers in order to play it on other workstations.

The electronic negatoscope function uses an additional monitor with a DICOM curve suspended together with the control unit on a common, dedicated lamp suspension.
The negatoscope allows you to select the patient's documentation by providing the PESEL number, name or date of the examination from the local RIS system e.g. computed tomography, magnetic resonance imaging, ultrasound). The possibility of video transmission breaks the distance barriers, ensuring ease of consultation and access to specialists from other centres in the country and in the world.

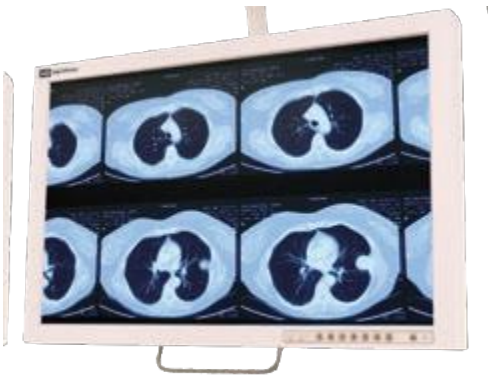

Operating lamp plusLED 96 HDTV / 96 with the INTEGRATOR DICO® system
Cat. No. K00160 (PREMIUM VERSION)
Cat. No. K00460 (PLUS PREMIUM VERSION)

The plusLED operating lamp has been equipped with a camera in HDTV quality and an INTEGRATOR DICO® system enabling image recording and video transmission. Video recording is done by touching a button on the screen of the digital negatoscope station, hung on the wall of the operating room. The material obtained in this way can be later completed on various data carriers in order to play it on other workstations.

The video transmission used in the lamps breaks the distance barriers, ensuring easy consultation and access to specialists from other centres in the country and around the world. It is an ideal solution that supports and facilitates all kinds of training and education. Gives invaluable opportunities in establishing cooperation between many centres with consultative abilities..

PlusLED PREMIUM and plusLED PLUS PREMIUM lamps with a video camera system

Operating lamp plusLED 96 HDTV / 96 / LED 23.6” with a camera, medical monitor and video transmission system
Cat. No. K00164 (PREMIUM VERSION)
Cat. No. K00464 (PLUS PREMIUM VERSION)

One of the domes of the plusLED operating lamp can be equipped with an HDTV camera, which enables documentation of surgical procedures and their ongoing observation. The image receiver can be a medical monitor suspended on a wall or an additional lamp arm, as well as a wireless, handy tablet compatible with the camera, on which the image from the installed camera is displayed. System software installed on the tablet allows the user to adjust the parameters of the operating lamp. By touching the tablet screen, you can change the basic parameters of the light, such as brightness or the diameter of the operating field. Ergonomic, clear and intuitive interface based on unambiguous and legible symbols additionally increases the functional value of the solution.

The plusLED operating lamp with this solution ensures flexibility and meets the individual needs of individual operating teams. An investment in this type of system is very beneficial because it contributes to increasing efficiency and improving the comfort of work.

Sets of operating and examination lamps plusLED PREMIUM and plusLED PLUS PREMIUM in the ceiling version

Operating lamp plusLED 96/96
Cat. No. K00120 (PREMIUM VERSION)
Cat. No. K00420 (PLUS PREMIUM VERSION)

Operating lamp plusLED 96/56
Cat. No. K00121 (PREMIUM VERSION)
Cat. No. K00421 (PLUS PREMIUM VERSION)

Operating lamp plusLED 56/56
Cat. No. K00122 (PREMIUM VERSION)
Cat. No. K00422 (PLUS PREMIUM VERSION)

Operating lamp plusLED 96
Cat. No. K00100
(PREMIUM VERSION)
Cat. No. K00400
(PLUS PREMIUM VERSION)

Operating lamp plusLED 56
Cat. No. K00110 (PREMIUM VERSION)
Cat. No. K00410 (PLUS PREMIUM VERSION)

PlusLED examination lamps in wall-mounted version

The single examination lamps plusLED 56 PREMIUM and plusLED 96 PREMIUM as well as plusLED 56 PLUS PREMIUM and plusLED 96 PLUS PREMIUM are available in a wall-mounted version. A set of arms used for wall mounting guarantees precise maneuvering of the lamp in a wide range.

Wall mounted operating lamp plusLED 96
Cat. No. K00101 (PREMIUM VERSION)
Cat. No.K00401 (PLUS PREMIUM VERSION)

Wall-mounted operating lamp plusLED 56
Cat. No. K00111 (PREMIUM VERSION)
Cat. No. K00411 (PLUS PREMIUM VERSION

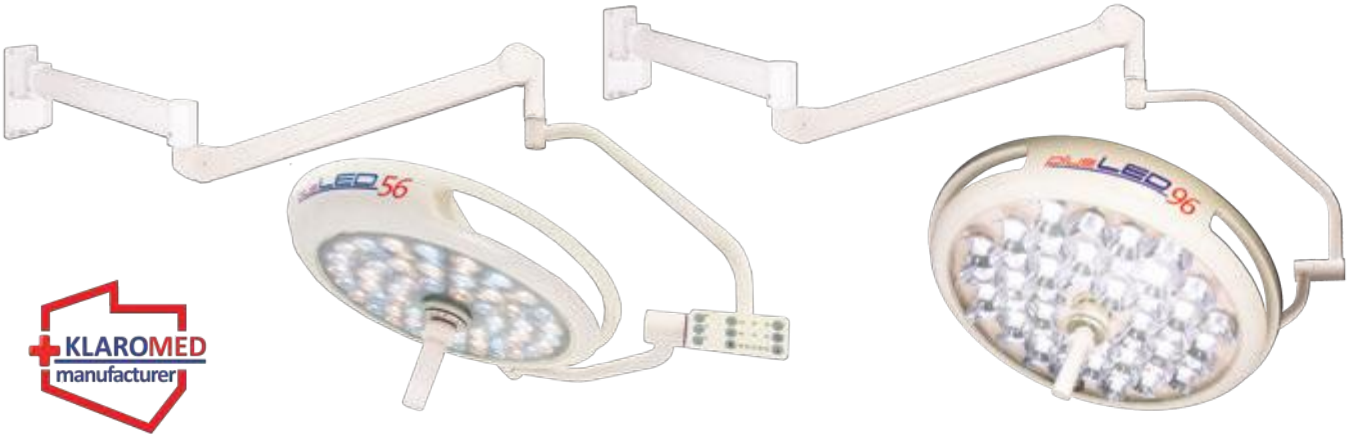

PlusLED examination lamps in a mobile version

The wide range of plusLED lamp solutions is complemented by operating lamps in a mobile stand version. Versions of mobile lamps equipped with batteries are ideal in the event of a power source failure, guaranteeing a long period of operation.

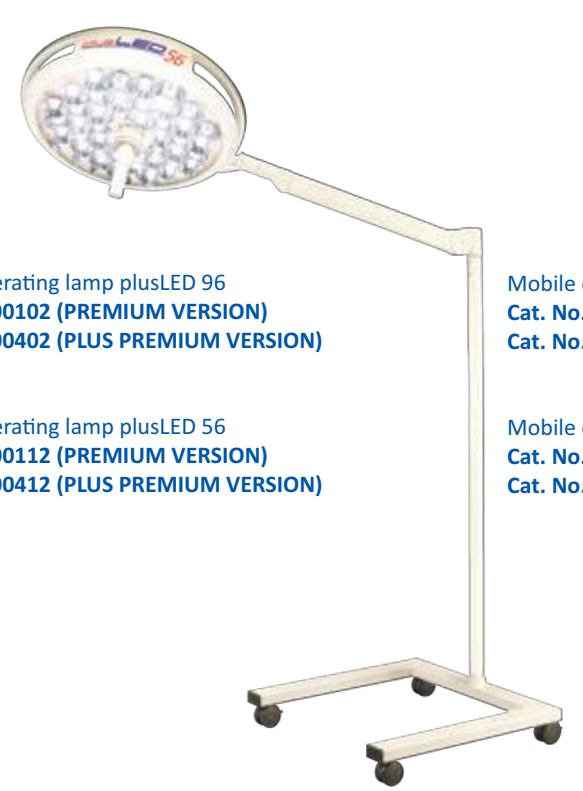

Mobile operating lamp plusLED 96
Cat. No. K00102 (PREMIUM VERSION)
Cat. No. K00402 (PLUS PREMIUM VERSION)

Mobile operating lamp plusLED 56
Cat. No. K00112 (PREMIUM VERSION)
Cat. No. K00412 (PLUS PREMIUM VERSION)

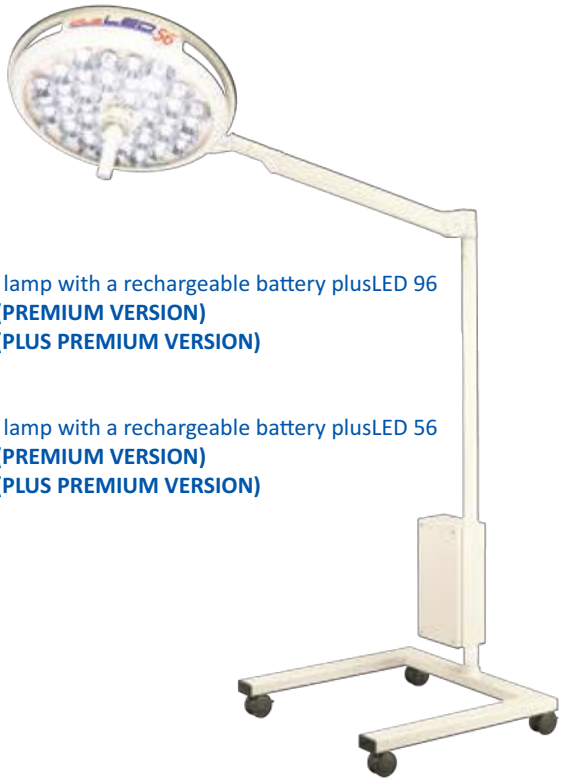

Mobile operating lamp with a rechargeable battery plusLED 96
Cat. No. K00103 (PREMIUM VERSION)
Cat. No. K00403 (PLUS PREMIUM VERSION)

Mobile operating lamp with a rechargeable battery plusLED 56
Cat. No. K00113 (PREMIUM VERSION)
Cat. No. K00413 (PLUS PREMIUM VERSION)

Technical parameters of plusLED lamps

We use components that are double-tested at the production stage. All electrical and electronic circuits in plusLED lamps are electromagnetically compatible. Our products meet all the requirements for first class medical devices and are CE marked.

The power supply system of the lamp allows it to adapt to the existing power supply conditions at the place of installation.

Lamps also work with backup / emergency power systems available in healthcare facilities.

Technical parameters	plusLED 96 PREMIUM	plusLED 56 PREMIUM	plusLED 96 PLUS PREMIUM	plusLED 56 PLUS PREMIUM
Number of LEDs	96	56	77	44
Light intensity at a distance of 1 m	160 000 lx	130 000 lx (option 160 000 lx)	160 000 lx	130 000 lx (option 160 000 lx)
Lighting intensity adjustment	40 – 160 klx	40 - 130 (160) klx	40 – 160 klx	40 - 130 (160) klx
The diameter of the operating field	160-360 mm	140-320 mm	160-360 mm	140-320 mm
Ra colour rendering index	97	97	99	99
R9 colour rendering index	97	97	99	99
Illumination depth	1400 mm	1400 mm	1750 mm	1750 mm
Colour temperature	4900K	4900K	3500K-4000K-4500K-5000K-5500K	3500K-4000K-4500K-5000K-5500K
AMBIENT endoscopic lighting	5-10% adjustable	5-10% adjustable	5-10% adjustable	5-10% adjustable
Temperature increase in the surgeon's head	<0,5^{O}C	<0,5^{O}C	<0,5^{O}C	<0,5^{O}C
Supply voltage	230V, 50 Hz	230V, 50 Hz	230V, 50 Hz	230V, 50 Hz
Power consumption	45 W	35 W	35W	26W
Lifetime of LEDs	> 60 000 h	> 60 000 h	> 70 000 h	> 70 000 h

plusLED ECO

Properties of plusLED 96 ECO and 56 ECO and plusLED 96 PLUS ECO and 56 PLUS ECO lamps

Operating lamps plusLED 96 ECO and plusLED 56 ECO as well as plusLED 96 PLUS ECO and plusLED 56 PLUS ECO are a solution designed for customers looking for high quality products at a reasonable price. Lamps provide precise light wherever it is necessary. The homogeneous nature of the light increases the comfort of the surgeon's work in every corner, even in the vast operating field. The device owes a high degree of shadowless and a large depth of lighting its unique design, which uses a greater number of LEDs of the highest quality. The white diodes used in the construction of operating lamps are the fifth generation LEDs, with an impressive lifetime measured in tens of thousands of hours and years of uninterrupted lighting.

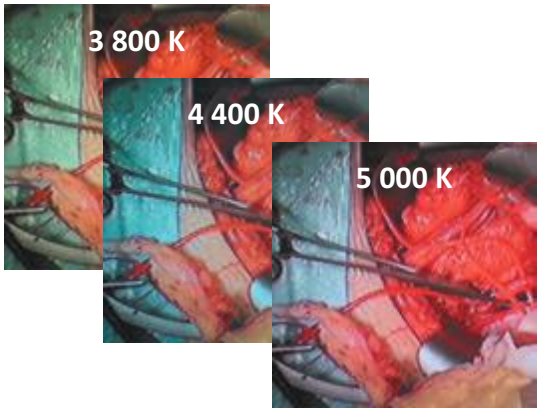

The main task of plusLED ECO operating lamps is to accurately reproduce the colour spectrum of the operating field, especially the red colour. This happens naturally. The delicate and precise light of the operating lamp is friendly and very comfortable for the operator's eyes. Three available levels of colour temperature make the device meet the expectations of even the most demanding surgical team.

Placing the control panel on the gimbal suspension near the dome is an ideal solution from the point of view of ergonomics. The panel allows you to turn the device on and off, change the level of illumination, select the colour temperature and turn on the AMBI endoscopic mode. In the plusLED 96 ECO and plusLED 56 ECO lamps, it was made in membrane technology.
The plusLED 96 PLUS ECO and plusLED 56 PLUS ECO lamps feature an innovative control panel in touch technology.

The safety glass ESG used in the construction of the lamp is resistant to breakage and scratches. The lamp housing is made of light aluminum alloys. It is a material that guarantees shock resistance and a long service life. Stylish design and various finishing versions will satisfy the most demanding customers.

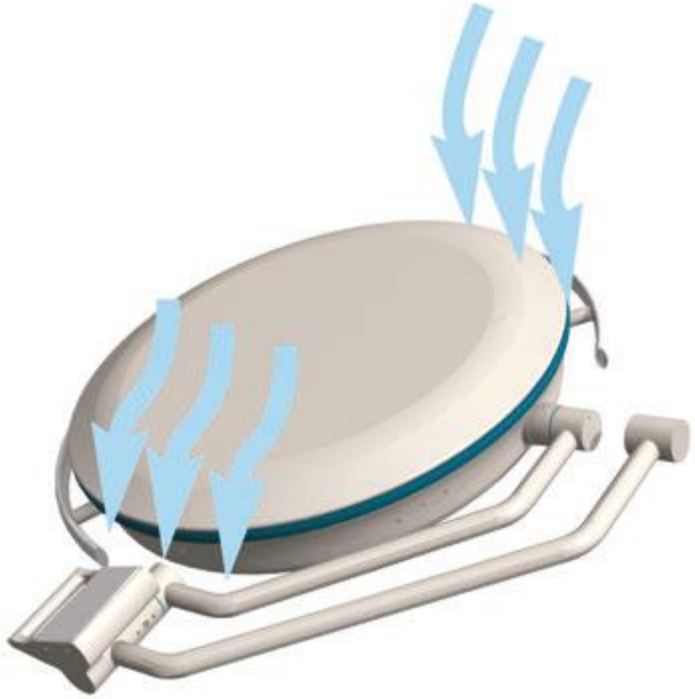

The optional non-sterile handle in the form of a long rail is easy to keep clean and improves the hygienic properties of the lamp, and also does not interfere with the laminar airflow in the operating room.

The sterile handle is centrally located on the dome axis, which facilitates precise positioning of the device. With its help, you can also adjust the diameter of the operating field. The central handle is complemented by matching sterile pads with the possibility of steam sterilization at a temperature of 134°C. The overlays are equipped with a blockade that securely fixes them in place, and also allows for instant replacement. The overlays have been ergonomically modelled, thanks to which they fit well in the surgeon's hand.

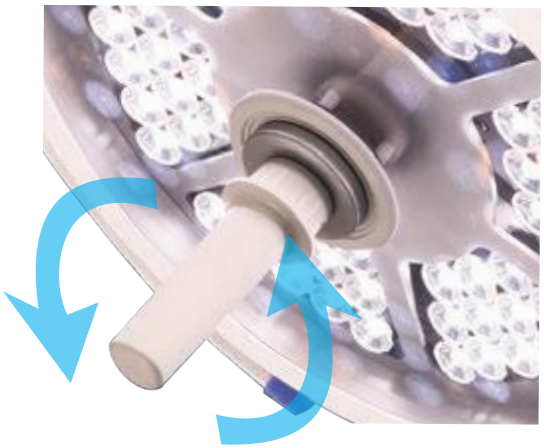

An HDTV camera can be placed in one of the lamp domes or in the axis of its suspension, which creates wide possibilities in the field of image transmission, communication and surveillance in the operating room. The image from the camera can be displayed on medical monitors, but also on a wireless, handy and modern tablet compatible with the camera. The system software allows the user to adjust the parameters of the operating lamp. Using the touch screen you can change the basic parameters of the light, such as brightness and colour temperature. Ergonomic, clear and intuitive interface based on unambiguous and legible symbols additionally increases the functional values of the device.

plusLED 96 ECO

Operating lamp plusLED 96 ECO:

- illuminance 160,000 lux at a distance of 1 meter
- lighting intensity adjustment in the range of 25,000 - 160,000 lux
- adjustable colour temperature
- operating field diameter 160-320 mm
- depth of illumination 1200 mm
- power consumption 80 W
- **membrane type control panel**

The lamp is available in a mobile configuration, a mobile with a battery, a single wall and ceiling configuration, and as a combination of two or three domes. The combination of domes can consist of plusLED 96 ECO or plusLED 96 ECO and plusLED 56 ECO. It is possible to mount an HD camera in the dome and a monitor on the third suspension arm.

plusLED 56 ECO

Operating lamp plusLED 56 ECO:

Operating lamp plusLED 56 ECO:
- illuminance 130,000 lx at a distance of 1 meter
- lighting intensity adjustment in the range of 25,000 - 130,000 lux
- adjustable colour temperature
- operating field diameter 160-280 mm
- depth of illumination 1000 mm
- power consumption 60 W
- **membrane type control panel**

KLAROMED manufacturer

The lamp is available in a mobile configuration, a mobile with a battery, a single wall and ceiling configuration, and as a combination of two or three domes. The combination of domes can consist of plusLED 56 ECO or plusLED 56 ECO and plusLED 96 ECO. It is possible to mount an HD camera in the dome and a monitor on the third suspension arm.

plusLED 96 plus ECO

Operating lamp plusLED PLUS 96 ECO:

- illuminance 160,000 lux at a distance of 1 meter
- lighting intensity adjustment in the range of 25,000 - 160,000 lux
- adjustable colour temperature
- operating field diameter 160-320 mm
- depth of illumination 1200 mm
- power consumption 80 W
- **TFT touch control panel**

The lamp is available in a mobile configuration, a mobile with a battery, a single wall and ceiling configuration, and as a combination of two or three domes. The combination of domes can consist of plusLED 96 PLUS ECO or plusLED 96 PLUS ECO and plusLED 56 PLUS ECO. It is possible to mount an HD camera in the dome and a monitor on the third suspension arm.

plusLED 56 plus ECO

Operating lamp plusLED 56 PLUS ECO:

- illuminance of 140,000 lx at a distance of 1 meter
- regulation of lighting intensity in the range of 25,000 - 140,000 lux
- adjustable colour temperature
- operating field diameter 160-280 mm
- depth of illumination 1000 mm
- power consumption 60 W
- **TFT touch control panel**

The lamp is available in a mobile configuration, a mobile with a battery, a single wall and ceiling configuration, and as a combination of two or three domes. The combination of domes can consist of plusLED 56 PLUS ECO or plusLED 56 PLUS ECO and plusLED 96 PLUS ECO. It is possible to mount an HD camera in the dome and a monitor on the third suspension arm.

Examples of lamp configurations plusLED 96 ECO and 56 ECO and plusLED 96 PLUS ECO and 56 PLUS ECO

Sets of operating and examination lamps in the ceiling version.

Operating lamp plusLED 96 HDTV ECO / 56 ECO with the system broadcast video, camera and medical monitor on the third arm
Cat. No. K00365 (ECO VERSION)
Cat. No. K00565 (PLUS ECO VERSION)

KLAROMED manufacturer

Operating lamp plusLED 96 HDTV ECO / 56 ECO with the system video transmission and camera
Cat. No. K00344 (ECO VERSION)
Cat. No. K00544 (PLUS ECO VERSION)

Operating lamp plusLED 96 ECO / 96 ECO
Cat. No. K00320 (ECO VERSION)
Cat. No. K00520 (PLUS ECO VERSION)

Operating lamp plusLED 96 ECO / 56 ECO
Cat. No. K00321 (ECO VERSION)
Cat. No. K00521 (PLUS ECO VERSION)

plusLED 56 ECO / 56 ECO
Cat. No. K00322 (ECO VERSION)
Cat. No. K00522 (PLUS ECO VERSION)

Operating lamp plusLED 56 ECO
Cat. No. K00310 (ECO VERSION)
Cat. No. K00510 (PLUS ECO VERSION)

Operating lamp plusLED 96 ECO
Cat. No. K00300 (ECO VERSION)
Cat. No.K00500 (PLUS ECO VERSION)

Examination lamps plusLED 96 ECO and 56 ECO and plusLED 96 PLUS ECO and 56 PLUS ECO in the wall version

Wall operating lamp plusLED 56 ECO
Catalogue number K00311 (ECO VERSION)
Catalogue number K00511 (PLUS ECO VERSION)

Wall operating lamp plusLED 96 ECO
Catalogue number K00301 (ECO VERSION)
Catalogue number K00501 (PLUS ECO VERSION)

Examination lamps plusLED 96 ECO and 56 ECO and plusLED 96 PLUS ECO and 56 PLUS ECO in the mobile version

The wide range of solutions offered by our company is complemented by operating lamps with a mobile stand. Versions of mobile lamps equipped with batteries are ideal in the event of a power source failure, guaranteeing a long period of uninterrupted operation.

Mobile operating lamp plusLED 56 ECO
Catalogue number K00312 (ECO VERSION)
Catalogue number K00512 (PLUS ECO VERSION)

Mobile operating lamp plusLED 96 ECO
Catalogue number K00302 (ECO VERSION)
Catalogue number K00502 (PLUS ECO VERSION)

Mobile operating lamp with
a rechargeable battery
plusLED 56 ECO
Catalogue number K00313 (ECO VERSION)
Catalogue number K00513 (PLUS ECO VERSION)

Mobile operating lamp with
a rechargeable battery
plusLED 96 ECO
Catalogue number K00303 (ECO VERSION)
Catalogue number K00503 (PLUS ECO VERSION)

Technical parameters of plusLED 96 ECO and 56 ECO and plusLED 96 PLUS ECO and 56 PLUS ECO lamps

We manufacture our lamps using double proven components. All electrical and electronic circuits in our lamps are electromagnetically compatible.

Our products meet all the requirements for first class medical devices and are CE marked. The power supply system of the lamp allows it to adapt to the existing power supply conditions at the place of installation. Lamps also work with backup / emergency power systems available in healthcare facilities.

Technical parameters	plusLED 96 ECO	plusLED 56 ECO	plusLED 96 PLUS ECO	plusLED 56 PLUS ECO
Number of LEDs	108	72	108	72
Light intensity at a distance of 1 m	160 000 lx	130 000 lx	160 000 lx	140 000 lx
Lighting intensity adjustment	25-160 klx	25-130 klx	25-160 klx	25-140 klx
The diameter of the operating field	160-320 mm	160-280 mm	160-320 mm	160-280 mm
Ra colour rendering index	96	96	96	96
R9 colour rendering index	97	97	97	97
Illumination depth	1200 mm	1000 mm	1200 mm	1000 mm
Colour temperature	3800K-4400K-5000K	3800K-4400K-5000K	3800K-4400K-5000K	3800K-4400K-5000K
AMBIENT endoscopic lighting	2-8 klx adjustable	2-8 klx adjustable	2-8 klx adjustable	2-8 klx adjustable
Control panel	membrane type	membrane type	touch TFT	touch TFT
Temperature increase in the surgeon's head	<1^{O}C	<1^{O}C	<1^{O}C	<1^{O}C
Supply voltage	230V, 50 Hz	230V, 50 Hz	230V, 50 Hz	230V, 50 Hz
Power consumption	80 W	60 W	80W	60W
IP protection class	57	57	57	57
Lifetime of LEDs	>60 000	>60 000	>60 000	>60 000

plus LED 37 ECO

The examination lamp plus LED 37 ECO is a solution for customers who need a medical lamp with very good parameters at a reasonable price. Illuminance at the level of 110 klx with the possibility of its adjustment, large diameter of the operating field, an excellent level of depth and a very high index of colour reproduction, in particular the most important colour red, allow the lamp to be used in simple surgical procedures, and allow the patient to be examined by a doctor of any specialization.

KLAROMED manufacturer

An additional advantage of the device is the ability to select the colour temperature level, which allows you to adjust the light to the preferences of the person performing the treatment or examination. Our product is environmentally friendly. The use of the most modern LEDs minimizes energy consumption and allows for financial savings. Extremely long life of light sources and their low susceptibility to damage guarantee that the product will serve the user for many years.

Sample configurations of plusLED 37ECO lamps

Ceiling mounted operating lamp
Cat. No. K00190
Cat. No. K00193 (with emergency power supply)

Mobile operating lamp plusLED 37 ECO
Catalogue number K00192
Catalogue number K00195 (with emergency power supply)

Wall mounted operating lamp plusLED 37 ECO
Cat. No.K00191
Cat. No. K00194 (with emergency power supply)

The examination lamp plus LED 37 ECO is characterized by the use of ergonomic functional solutions that allow for simple and intuitive operation of the device. The lighting parameter control panel is placed on the dome. The modern design of the dome in the shape of a flat diamond contributes to the unique aesthetic value of the product. The lamp is available in a mobile version, a wall version and a ceiling version. All versions can be optionally equipped with an emergency power supply.

Technical parameters	plusLED 37 ECO
Number of LEDs	25
Light intensity at a distance of 1 m	110 000 lx
Lighting intensity adjustment	40-110 klx
The diameter of the operating field	195 mm
Ra colour rendering index	97
R9 colour rendering index	99
Illumination depth	1750 mm
Colour temperature	3800K-4800K
Temperature increase in the surgeon's head	<1^{O}C
Supply voltage	230V, 50 Hz
Power consumption	60 W
Lifetime of LEDs	> 60 000 h

Technical parameters of the plusLED 37 ECO lamp

plus LED 24 ECO

The examination lamp plus LED 37 ECO

- illuminance of 70,000 lx at a distance of 1 meter
- lighting intensity adjustment
- diameter of the light spot 170 mm

The lamp is available in a mobile, wall and single ceiling configuration. All versions can be optionally equipped with an emergency power supply.

plus LED ECO

Examples of plusLED 24 ECO lamp configurations

Ceiling mounted operating lamp plusLED 24 ECO
Cat. No. K00210
Cat. No. K00213 (with emergency power supply)

Mobile operating lamp plusLED 24 ECO
Cat. No. K00212
Cat. No. K00215
(with emergency power supply)

Wall mounted operating lamp plusLED 24 ECO
Cat. No. K00211
Cat. No. K00214 (with emergency power supply)

Selected models of plusLED 24 ECO lamps are equipped with an emergency power supply system with a battery, which can ensure uninterrupted operation of the device even for several hours in the event of an electrical failure. The battery is charged automatically and maintenance-free, without interfering with the basic functions of the device.

Technical parameters	plusLED 24 ECO
Number of LEDs	19
Light intensity at a distance of 1 m	70 000 lx
Lighting intensity adjustment	7-70 klx
The diameter of the operating field	170 mm
Ra colour rendering index	95
R9 colour rendering index	94
Illumination depth	1800 mm
Colour temperature	4300K
Temperature increase in the surgeon's head	<1^{O}C
Supply voltageNapięcie zasilania	230V, 50 Hz
Power consumption	23 W
Lifetime of LEDs	> 50 000 h

Technical parameters of the plusLED 24 ECO lamp

plusLED 7ECO

Diagnostic lamp plusLED 7 ECO:
- illuminance 30,000 lx at a distance of 0.5 meters
- regulation of the light intensity with an independent knob
- diameter of the light spot 100 mm

plusLED ECO

The lamp is available in a mobile version or mounted on a rail.

Mobile diagnostic lamp
plusLED 7 ECO
Cat. No. K00218

The diagnostic lamp is attached
on a rail plusLED 7 ECO
Cat. No. K00219

Technical parameters of the plusLED 7ECO diagnostic lamp

Technical parameters	plusLED 7ECO
Light intensity at a distance of 0.5 m]	30 000 lx
Lighting intensity adjustment	10-100%
The diameter of the operating field	100 mm
Ra colour rendering index	93
Colour temperature	4500K
Supply voltage	~230V, 50 Hz
Lifetime of LEDs	> 20 000 h

plusLED 56
plusLED 56

plusLED 96 ECO

KLAROMED

Quality Management System

EN ISO
13485:2016

INTEGRATOR

SYSTEM FOR OPERATING BLOCKS
MEDICAL SOFTWARE
OPERATING BLOCK

Manufacturer

KLAROMED

A solution to increase efficiency The operating block and ergonomics of the team's work operational

General information 38
Technical controle module 40
Aparature control module 40
Monitoring module 41
DICOM module 41
Negatoscope module 42
Record module 42
Report module 44
Switching video module 44
Videoconference module 45
Exchanging data module 45

INTEGRATOR – Tool of 21st century

INTEGRATOR is a proprietary, modular, multimedia system IT system for the integration of operating theaters. The system integrates the medical devices of the room operational and communicates with internal hospital systems.

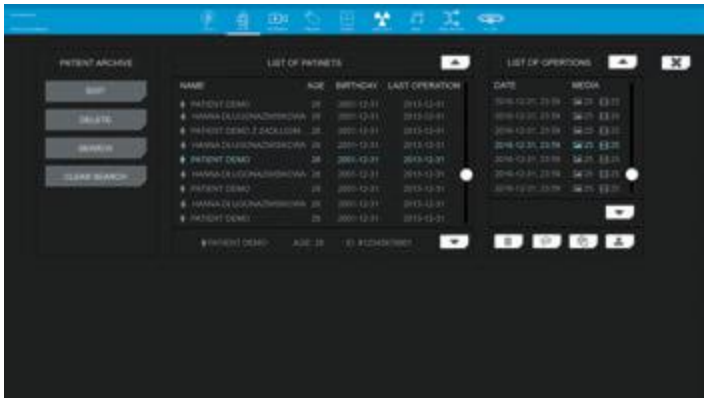

The main goal of the INTEGRATOR system is support and increasing the operating efficiency of the operating theater.

INTEGRATOR is:

- reliability - a POLISH product
- high quality - CLASS I medical device – registered into Register of Medical Devices
- intuitive and easy operation - the touch screen of the monitor
- security - individual encryption key
- full DICOM compliance
- system is open to other applications

The INTEGRATOR consists of modules that can be individually adjust depending on your preferences and budget.

10 MODULES OF INTEGRATOR SYSTEM:

1. TECHNICAL CONTROL MODULE
2. APPARATURE CONTROL MODULE
3. MONITORING MODULE
4. DICOM MODULE
5. NEGATOSCOPE MODULE
6. RECORDING MODULE
7. REPORT MODULE
8. VIDEO SWITCHING MODULE
9. VIDEO CONFERENCE MODULE
10. DATA EXCHANGE MODULE

Modular system structure

KLAROMED manufacturer

Integrator module:

INTEGRATOR

- TECHNICAL CONTROL MODULE
- APPARATURE CONTROL MODULE
- MONITORING MODULE
- DICOM MODULE
- NEGATOSCOPE MODULE
- RECORDING MODULE
- REPORT MODULE
- VIDEO SWITCHING MODULE
- VIDEO CONFERENCE MODULE
- DATA EXCHANGE MODULE

1. TECHNICAL CONTROL MODULE

The system allows you to control practically each parameter of devices and installations located within the operating room. Thanks to the use of an integrated system, staff are free to make necessary changes in the operating room. The system allows you to control practically each parameter of devices and installations located within the operating room. Thanks to the use of an integrated system, staff are free to make necessary changes in the operating room.

Examples of possibilities:

- operating room door control
- air conditioning and ventilation control
- control of window blinds
- control of the lighting

2. APPARATURE CONTROL MODULE

This module provides the ability to control devices on operating room. There are no limits to the amount of control devices, and everything depends only on your needs and user preferences. Additional devices may be added even after system installation. Possible connections available incl. via: IP, Wi-Fi, IP Port, RS232.

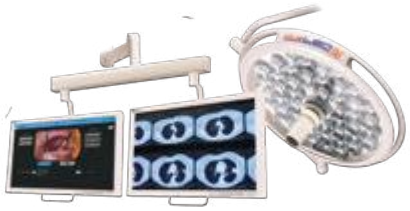

Examples of medical equipment control options:

- operating lamp
- camera in the operating lamp
- operating table
- diathermy
- laparoscope

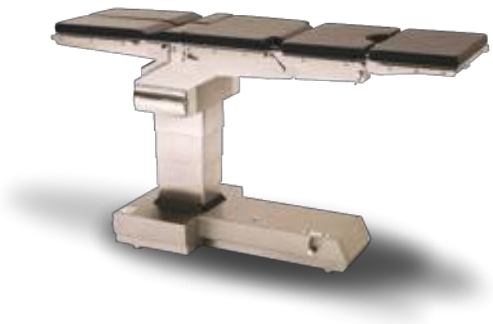

It is also possible to connect a cardiac monitor to the system, anesthesia machines or infusion pumps for recording medical parameters during the operation. The system supports all available communication protocols which makes the adaptation of new devices transparent and straight.

Medical monitors are provided for each operating room having a touch function, allowing for direct communication within the system.

3. MONITORING MODULE

This module provide comfort and safety at work in the operating theater. During monitoring and informing about the condition of the hall's infrastructure operational, we have constant access to the state medical gases as well as conditio electrical safety of the connected Electrical Equipment in the Room.

4. DICOM MODULE

The DICOM module is used for fast acquisition patient information. INTEGRATOR system provides connectivity using the standard DICOM. This standard is widely used in the medical world to view and use patient information in centralized management systems RIS - (Radiological Information System). DICOM is digital imaging and image exchange in medicine. Development modern digital research methods has resulted in the emergence of the research imaging standard. Today it is difficult to imagine modern medicine without the DICOM standard and PACS systems. DICOM is applicable in image processing, e.g. computed tomography, digital angiography and digital conventional radiography.

An image saved in DICOM format takes over 30MB and can contain about 12,000 different indicators called tags (individual patient data). Digital images and their computer analysis have many advantages. Photos received are available in a very short time, almost immediately after execution, easy to store and retrieve images on the disk, no need to enter the same data for each study (this minimizes the risk of error), possibility electronic data exchange between different clinics, as well as between different offices in one building -no need to print and physically deliver the file. DICOMIZATION causes the material to receive characteristic data of the patient allowing for unambiguous identification.

5. NEGATOSCOPE MODULE

The digital negatoscope module allows you to display images radiological examinations performed with the digital method. Thanks to the use of The operating team gets access to the digital negatoscope current radiological examinations of the operated patient ,acquired from hospital information systems.

The monitor used in the digital negatoscope displays DICOM compliant image. It is also subject to calibration screen.

6. RECORDING MODULE

The recording and archiving module provides capture digital audio and video sequences. INTEGRATOR captures the image single-channel or multi-channel in quality and resolution up to 4K.

Recorded signal sources can come from:

- laparoscopes
- endoscopes
- surgical microscopes
- imaging systems
- ceiling cameras omnidirectional
- cameras in operational lamps
- C arm
- ultrasound scanners
- cardiac monitors

The INTEGRATOR system allows viewing, importing and media export to conventional media, e.g. DVD, for subsequent archiving. The system can be connected PenDrive mass storage devices and USB portable drives.

The purpose of this module is to enrich the patient's documentation. You can also create, edit and print report. Optionally, a switch can be used for writing data. By the switch the footswitch it is possible to control the recording module right in the operating field.

It is also possible to trigger recording and taking photos by means of gestures - complete sterility.

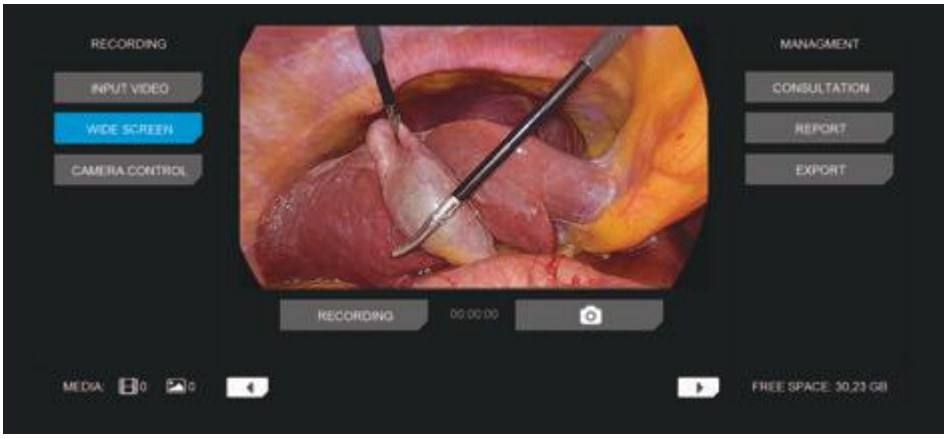

7. RAPORT MODULE

This module allows you to create an exact patient's medical records during surgery. Main doctor can make a complete report containing all patient data, photos and videos along with descriptions of the operations performed. The generated report is available in the system as medical records.

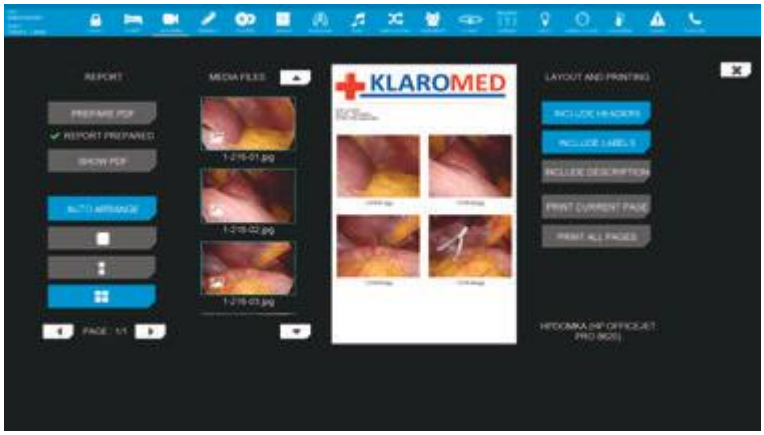

8. VIDEO SWITCHING MODULE

This module allows you to switch the image between multiple monitors in the operating room and view video sources.

The main benefits are:

- simple video source selection
- full-screen switching
- the video switching module manages a 12x12, 20x20 or 40x40 input / output matrix - in practice this means that **you can connect as many as 40 video devices**

The video switch distributes the video signal around the room using high-quality LC optical cabling, HD / SD-SDI coaxial or cables: S-Video, RGB HV, RGBs, YPbPr, DVI and Composite.

The management of 4K images on the monitors takes place without any time delays.

9. VIDEO CONFERENCE MODULE

The videoconference module provides the possibility of networking videoconferencing with more than one user with anywhere outside the hospital using the local network. This option allows you to transmit any chosen one audio and video signal sources.

Benefits:

- control via the application module – maximum comfort of work of the operating room staff and others videoconference participants
- access to specialists from other locations
- is an ideal solution to support training and education
- helps in the exchange of knowledge and experiences international

10. DATA EXCHANGE MODULE

This module is a complete exchange of patient data with Hospital Systems IT: HIS, RIS, CIS, LIS.

Data exchange concerns, among others:

- patient identification
- commissioned research
- operation schedules
- test dates
- patient test records

It is possible to read any modality that is implemented in the hospital. The modalities include CT (computed tomography, MR (magnetic resonance imaging), US (ultrasound), etc.

KLAROMED

Operating Tables

Manufacturer

KLAROMED

Operating table with interchangeable table tops MERCURY 52
Mobile universal electrohydraulic operating table SYRIUSZ 54
Mobile universal electrohydraulic operating table SEGIN 56
Mobile electromechanical universal operating table PERSEUSZ ... 58
Mobile universal hydraulic operating table ORION 60
Accessories for operating tables 62
Multi-operational surgery arm for patient positioning 66
Surgical Stirrups 68
Surgical Beach Chair 70
Support for knee arthroscopy 71
Carbon hand table with adjustable leg 72
Lateral Positioners (set of 3) 73
Universal Prepper 74
Multi-Axis Arm Positioner 75
Knee Crutches 76
Surgeon Chair Juliusz 77
Radiographic operating table with carbon fiber top HERKULES..... 78
Automatic transporter - SENTER 80

Operating table with interchangeable table tops MERCURY

Cat. No. K71012 - Transporter for table tops (no dorsal section bending without height adjustment
Cat. No. K71013 - Transporter for table tops (dorsal section bending included) with height adjustment..

Table top longitudinal slide on 320 mm
(controlled remotely)

Head section
with dual tilt

Dorsal section
mechanical bending

System Features:

- Multifunctional operating table and patient transporting system
- Removable table tops with remote control, dorsal section, longitudinal slide and tilt
- Table top widened to 540 mm
- Viscoelastic mattress with memory effect
- The flat base increases the space for the X-ray System operation with C - arm in the table lower position
- Two programmable table top positions

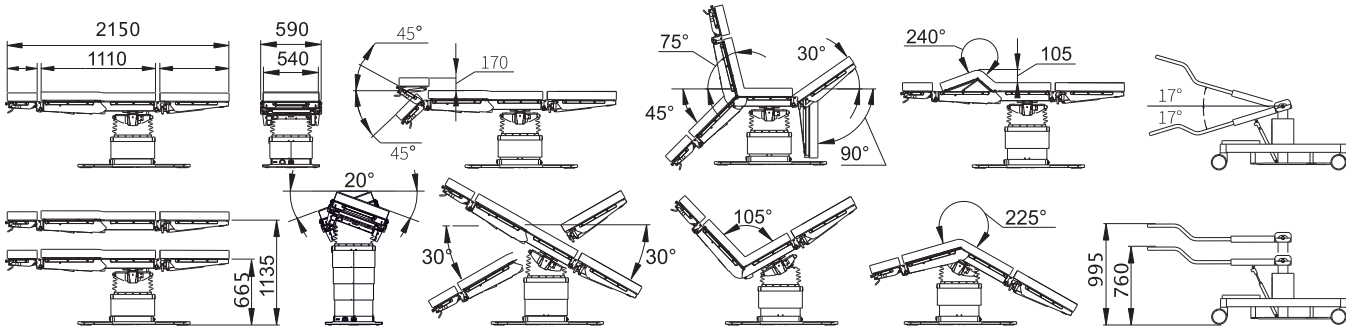

Advantages of the system:

- Cordless remote control (basic option)
- Table top zero positioning”
- Head and legs sections quick fixation
- Column has no backup drive
- Eliminates the need to transfer the patient to the carrier, which reduces the risk of injury to the patient

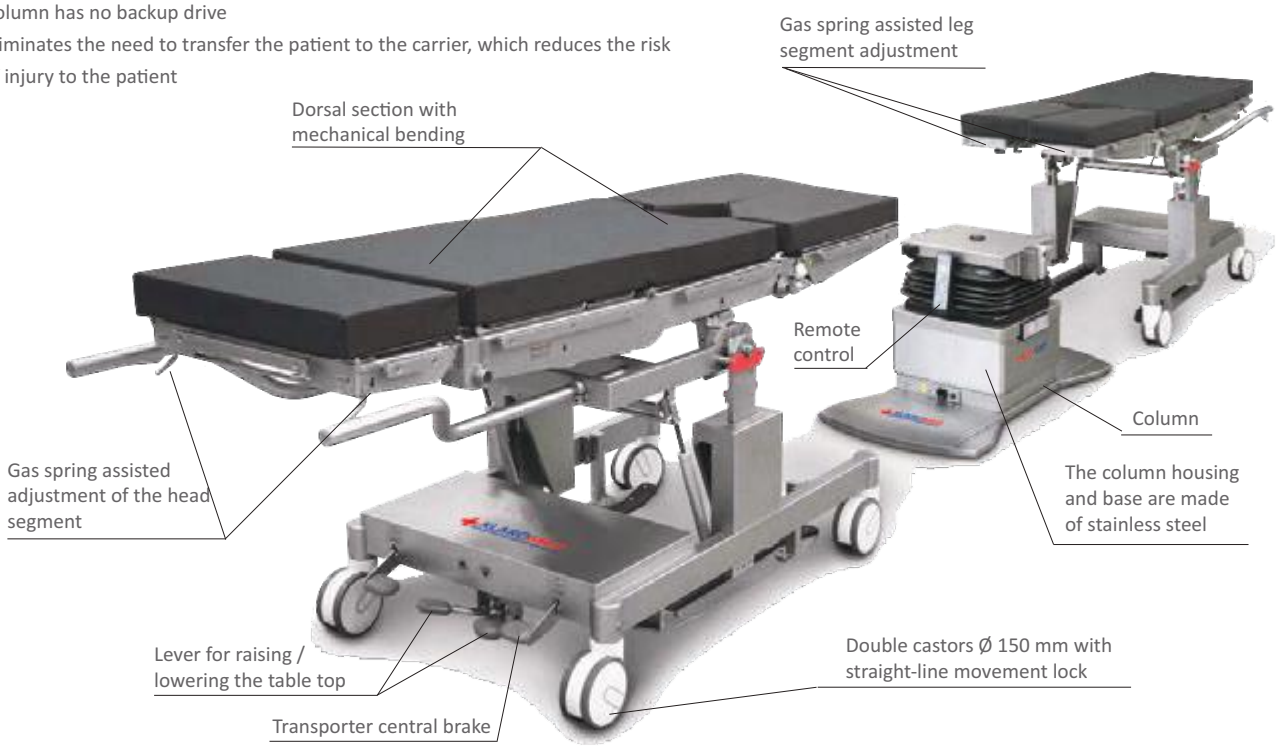

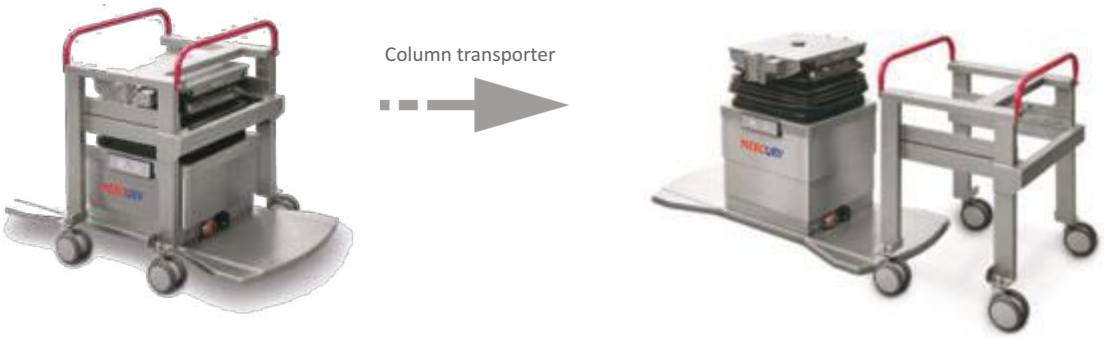

Viscoelasstic mattress with memory effect

Corded remote control (basic option)

Cordless remote control (basic option)

Quick fixation of removable sections

Mobile universal electrohydraulic operating table SYRIUSZ

Cat. No. K71010

MAXIMUM SAFETY MANY APPLICATIONS

- 5-6 segment operating table made of stainless and acid-resistant steel
- 2 control systems guarantee high reliability and failure-free operation:
  - Electro-hydraulic - regulated by remote control
  - Mechanical-hydraulic - regulated by a foot pump
- Full and intuitive control by remote control, side panel, foot pump
- Maximum working load in all positions - 250 kg
- Seamless anti-bedsore mattresses, antistatic, antibacterial with silver ions mounted in a socket and pivot system
- Wide range of accessories in the basic version
- Warranty 24 months

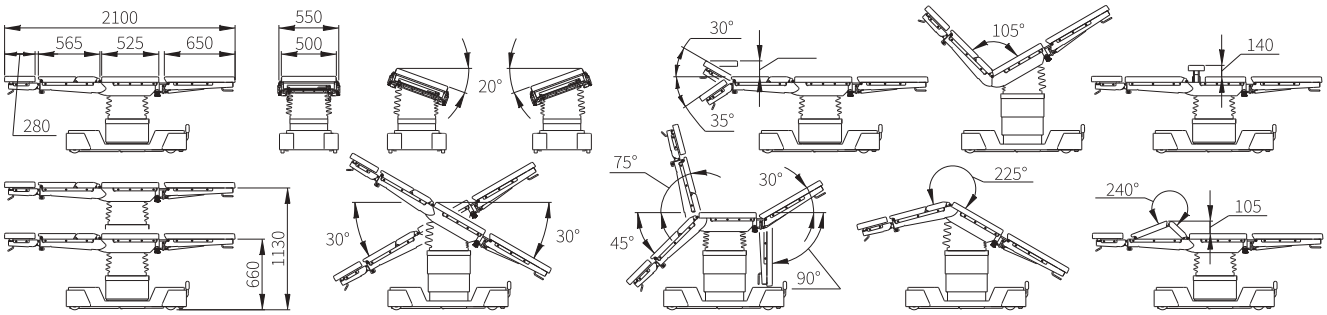

Accessories included in the basic version

- Anesthesia screen - 1 pc.
- Infusion stand - 1 pc.
- Injection plate - 2 pcs.
- Body strap - 1 pc.
- Hand strap - 2 pcs.
- X-ray cassette holder - 1 pc.
- Side rest - 2 pc

Product features

- Maximum security - 2 systems control, the ability to control from 3 levels:
  remote control, side panel, foot pump
- Stability - the table is placed on 4 pull-outs feet
- Translucent to X-ray radiation all over the length of the table top
- Full cooperation with the C arm
- Modular operating table top
- Additional equipment kits will allow performing a full range of treatments surgical

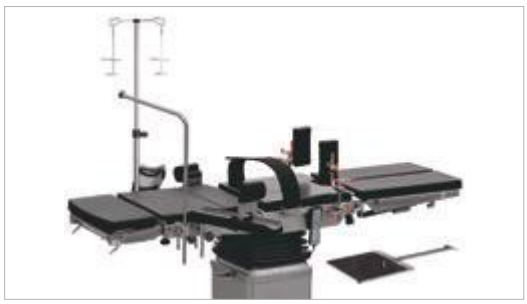

Head section with dual tilt

In-built mechanical kidney bridge (optional)

Mechanical dorsal section bending (optional)

Technical data

Table length	2100 mm
Table width	500 mm
Table width with side rails	550 mm
Min.table height without mattresses	660 mm
Max. table height without mattresses	1080 mm
Dynamic safe table load	250 kg
Table weight (without accessories)	270 kg
Longitudinal slide	320 mm
Back segment adjustment	-45º/+75°
Head segment adjustment	-35º/+30º
Leg segment adjustment	-90º/+30º
Trendelenburg/ anty trendelenburg	-30º/+30º
Lateral table tilts	-20º/+20º
Adjustable kidney uplift	140 mm
Thoracic uplift (option)	105 mm

The purpose of the table

- General surgery
- Orthopedics / Traumatology
- Urology
- Gynecology
- Ophthalmology / ENT
- Neurosurgery
- Proctology

Mobile universal electrohydraulic operating table SEGIN

Cat. No. K71011

ONE TABLE, MANY APPLICATIONS

- 5-6 segment operating table made of stainless and acid-resistant steel
- Seamless anti-bedsore mattresses, antistatic, antibacterial with silver ion anti-decubitus mattresses mounted in a socket and pin system
- Maximum working load in all positions - 250 kg
- Intuitive, full remote control
- Wide range of accessories in the basic version
- Warranty 24 months

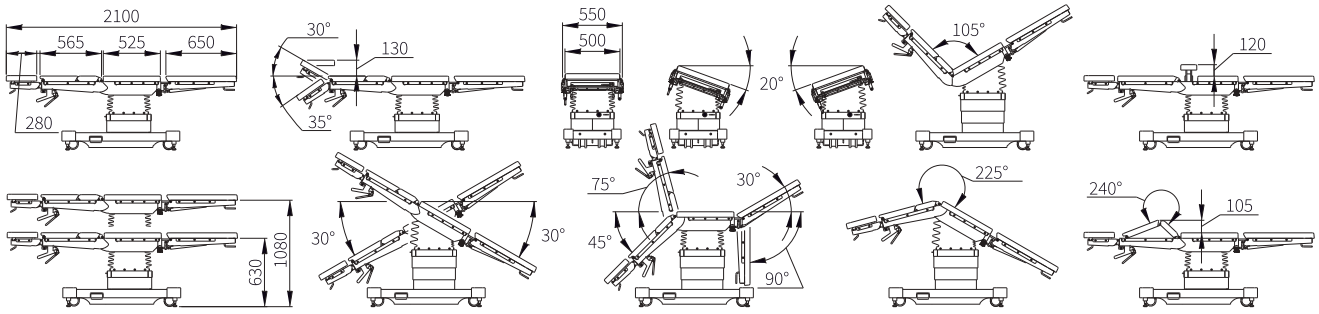

Accessories included in the basic version

- Anesthesia screen - 1 pc.
- Infusion stand - 1 pc.
- Injection plate - 2 pcs.
- Body strap - 1 pc.
- Hand strap - 2 pcs.
- X-ray cassette holder - 1 pc.
- Side rest - 2 pc

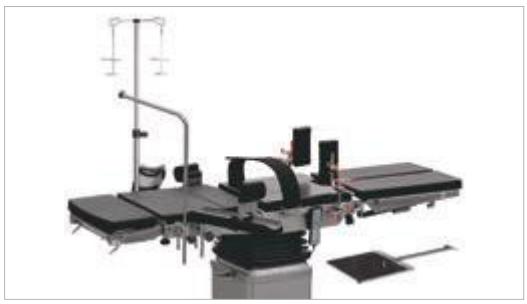

Product features

- Stability - table placed on 4 extendable feet
- Translucent to X-ray radiation all over the length of the table top
- Full cooperation with C-arm
- Modular operating table top
- Additional equipment sets enable full range of surgical procedures surgical procedures

Electrohydraulic adjustment of the kidney bench

Head section with dual tilt

Mechanical dorsal section bending (optional)

Technical data

Table length	2100 mm
Table width	500 mm
Table width with side rails	550 mm
Min.table height without mattresses	630 mm
Max. table height without mattresses	1080 mm
Dynamic safe table load	250 kg
Table weight (without accessories)	290 kg
Longitudinal slide	320 mm
Back segment adjustment	-45º/+75°
Head segment adjustment	-35º/+30º
Leg segment adjustment	-90º/+30º
Trendelenburg/ anty trendelenburg	-30º/+30
Lateral table tilts	-20º/+20º
Adjustable kidney uplift	120 mm
Thoracic uplift (option)	105 mm

The purpose of the table

- General Surgery
- Orthopaedics / Traumatology
- Urology
- Gynecology
- Ophthalmology / ENT
- Neurosurgery
- Proctology

Mobile electromechanical universal operating table PERSEUSZ

Cat. No. K71005

ECONOMIC AND MULTI TASK

- 4-6 segment, universal, operating table
- Stainless and acid-proof steel table column with partial rubber collar
- Intuitive control via wired remote control
- Maximum working load in all positions - 220 kg
- Seamless anti-bedsore, anti-static, anti-bacterial mattresses with silver ions mounted in a socket-pin system
- A wide range of accessories in the basic version
- 24-month warranty

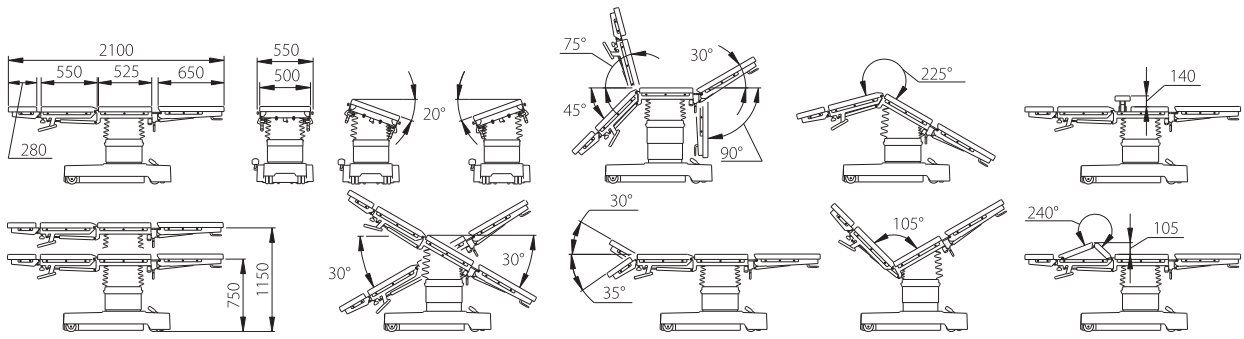

Accessories included in the basic version

- Anesthesia screen - 1 pc.
- Infusion stand - 1 pc.
- Injection plate - 2 pcs.
- Body strap - 1 pc.
- Hand strap - 2 pcs.
- X-ray cassette holder - 1 pc.
- Side rest - 2 pc

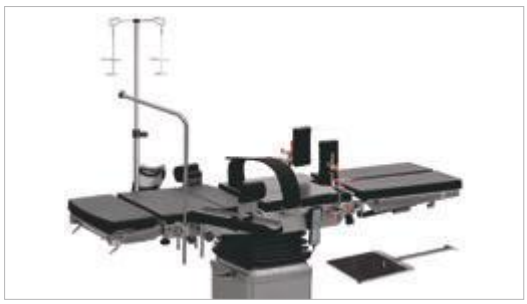

Product features

- Stability - the table is placed on 2 extendable feet
- Double wheels built into the base, do not protrude beyond the outline of the base, ensure stability and mobility
- X-ray translucent on the entire length of the table top
- Full cooperation with the C arm
- Additional equipment kits enable the full range of surgical procedures to be performed chirurgicznych

Head section with dual tilt

In-built mechanical kidney bridge (optional)

Mechanical dorsal section bending (optional)

Technical data

Table length	2100 mm
Table width	500 mm
Table width with side rails	550 mm
Min.table height without mattresses	750 mm
Max. table height without mattresses	1050 mm
Dynamic safe table load	220 kg
Table weight (without accessories)	200 kg
Longitudinal slide	320 mm
Back segment adjustment	-45º/+75°
Head segment adjustment	-35º/+30º
Leg segment adjustment	-90º/+30º
Trendelenburg/ anty trendelenburg	-30º/+30º
Lateral table tilts	-20º/+20º
Adjustable kidney uplift	140 mm
Thoracic uplift (option)	105 mm

The purpose of the table

- General surgery / Hand surgery
- Orthopedics / Traumatology
- Knee arthroscopy
- Urology
- Gynecology
- Ophthalmology / Laryngology
- Neurosurgery
- Proctology

Mobile universal hydraulic operating table ORION

Cat. No. K71006

MOBILITY - ECONOMY

- 4-6 segment, universal, operating table
- Column and base housing made of high-impact ABS plastic
- Maximum working load in all positions - 160 kg
- Seamless anti-bedsore, anti-static, anti-bacterial mattresses with with silver ions mounted in a socket-pin system
- A wide range of accessories in the basic version
- 24-month warranty

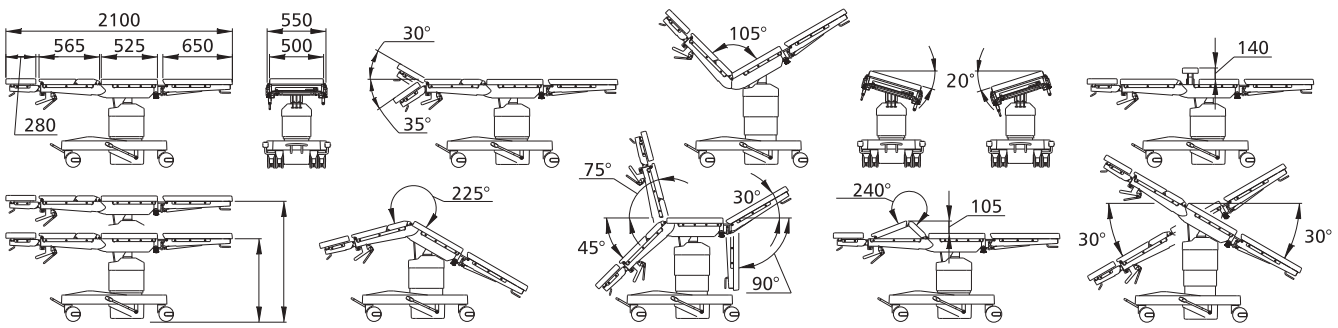

Accessories included in the basic version

- Anesthesia screen - 1 pc.
- Infusion stand - 1 pc.
- Injection plate - 2 pcs.
- Body strap - 1 pc.
- Hand strap - 2 pcs.
- X-ray cassette holder - 1 pc.
- Side rest - 2 pc

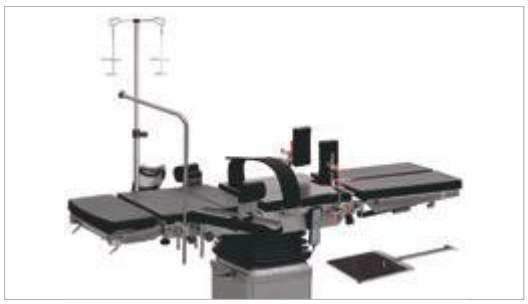

Product features

- Double 150 mm wheels with central brake and directional travel lock
- The large diameter of the wheels enables comfortable patient movement within the operating room
- X-ray translucent on the entire length of the table top
- Full cooperation with the C arm
- Additional equipment kits enable the full range of surgical procedures to be performed

In-built mechanical kidney bridge (optional)

Lateral tilt - mechanical adjustment (option)

Mechanical dorsal section bending (optional)

Technical data

Table length	2100 mm
Table width	500 mm
Table width with side rails	550 mm
Min.table height without mattresses	770 mm
Max. table height without mattresses	1070 mm
Dynamic safe table load	160 kg
Table weight (without accessories)	150 kg
Back segment adjustment	-45º/+75°
Head segment adjustment	-35º/+30º
Leg segment adjustment	-90º/+30º
Trendelenburg/ anty trendelenburg	-30º/+30º
Lateral table tilts	-20º/+20º
Thoracic uplift (mechanical option)	140 mm

The purpose of the table

- General surgery / Hand surgery
- Knee arthroscopy
- Urology
- Gynecology
- Ophthalmology / Laryngology

Accessories for operating tables

Set for general surgery

This set of accessories is intended for general surgery and anesthesiology. The basic constructional material of the accessories is stainless steel.

Delivery set:
- Anesthesia screen - 1 pc.
- Infusion stand - 1 pc.
- Injection plate - 2 pcs.
- Body strap - 1 pc.
- Hand strap - 2 pcs.
- X-ray cassette holder - 1 pc.
- Side rest - 2 pc

Set for ortho-traumatological operations on lower limbs (basic for bones reposition and traction)

Set is a basic set for ortho-traumatological surgeries on lower limbs for treatment that implies tension and osteosynthesis of upper / lower limbs.

Delivery set:
- Orthopedic section - 1 pc.
- Tensioner mechanism - 1 pc.
- Ordinary supporting leg - 1 pc.
- Retainer rod - 1 pc.
- Telescopic section leg with composite clamp - 2 pcs.
- Composite clamp - 2 pcs.
- Leg section(surgical) boots - pair.
- X-ray cassette holder - 1 pc.
- Trolley - 1 pc.

Set for ortho-traumatological operations on thigh

Set for ortho-traumatological surgeries on thigh. The basic constructional material of the accessories is stainless steel. It can be used only with basic setfor ortho-traumatological operations on lower limbs for treatment that implies tension and osteosynthesis of upper / lower limbs.

Delivery set:
- Lifting assembly with perineal support (thigh support) - 1 pc.
- Extention for orthopedic section - 1 pc.
- Leg support with radial clamp - 1 pc.
- Rotary lever with lower leg (calf) support - 1 pc.
- Tension bracket holder - 1 pc.

Set for ortho-traumatological operations on lower leg and knee

Set for ortho-traumatological surgeries on lower leg and knee. The basic constructional material of the accessories is stainless steel. It can be used only with basic set for ortho-traumatological operations on lower limbs for treatment that implies tension and osteosynthesis of upper / lower limbs.

Delivery set:
- Universal rotary popliteal support with hinged stabilization of joint - 1 pc.
- Tension bracket holder - 1 pc.

Set for arthroscopy

For treatment that implies tension and osteosynthesis of upper / lower limbs.

Delivery set :
- Popliteal support with adjusting thigh holder — 1 pc.
- Gear unit with swivel clamp of popliteal support — 1 pc.
- Operation crank — 1 pc.
- Crank holder — 1pc.

Set for plaster bandaging in pelvic zone and lower limbs

Set for plaster bandaging in pelvic zone and lower limbs . The basic constructional material of the accessories is stainless steel. It can be used only with basic set for ortho-traumatological operations on lower limbs for treatment that implies tension and osteosynthesis of upper / lower limbs.

Delivery set :
- Cross bar stand for leg suspending — 1 pc.
- Assembly for plaster bandaging in pelvic zone — 1 pc.

Set for gynecology

Set for gynecology intended for gynecological and obstetric manipulations (examining, surgeries, etc.). All metallic element of set are stainless steel made. Supports according to Geppel fixtured
on side rails of central section of operating table, rotate-action, up-down and lateral positioning.

Delivery set:
- Leg support with radial clamp - 2 pcs.
- Side mounted tank - 1 pc.

Set for urology

Set for urology intended for urological surgeries and examination;All metallic element of set are stainless steel made. Additional 400 mm radiolucent section with antistatic coating allows substantial shift of patient pelvic zone out of table column and free access of X-ray unit. Additional section design allows mounting of leg sections, supports according to Geppel, X-ray cassette and rotating holder of tank with drainage system.Additional section mounted to joints of cental section (instead of leg sections). Leg supports and tank with rotating holder are fixtured on side rails of additional section.

Delivery set:
- Leg support with radial clamp — 2 pcs.
- Additional (extension) section, pad included — 1 pc.
- Tank with rotating holder and drainage system — 1 pc.

Set for proctology

Set is used for examination and proctological / rectal operations, operations on vertebral bones. Roller adjusted by height, stainless steel made metallic elements. Seamless knee section and roller made of integral polyurethane with antistatic coating.

Delivery set :
- Roller on supporting legs — 1 pc.
- Knee section (with in-built clamp) — 1 pc.
- Radial tooth-type clamp — 2 pcs.

Set for operations with lateral positioning of arm

Set mounted on table top side rails of operating table. Ball joint and telescopic supporting legs allow different tilt and height adjustment of side table. 650x350 mm radiolucent working surface. Stainless steel metallic elements. Molded padding made of integral polyurethane with antistatic coating.

Delivery set:
- Supporting legs with sliding block — 1 pc.
- Frame with ball joint — 1 pc.
- Pad — 1 pc.

Set for operations with legs positioning according to Geppel

Set mounted on panel side rails of operating table by radial tooth-type clamp, adjusted by height and angle. Use of ball type clamp allows smooth leg positioning of patient; Stainless steel metallic elements. Molded padding made of integral polyurethane with antistatic coating..

Delivery set:
- Leg support - 1 pc.
- Radial tooth-type clamp - 1 pc.

Set of additional accessories for orthopedics and traumatology surgeries (on upper limbs)

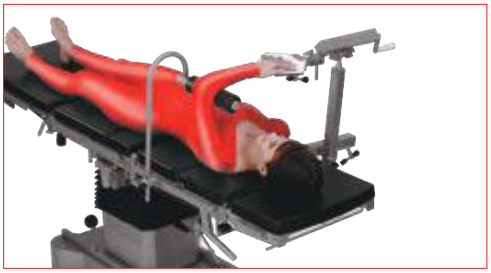

Set for ortho-traumatological surgeries on upper limbs. The basic constructional material of the accessories is stainless steel.

Delivery set:
- Support for forearm - 1 pc.
- Support for upper arm - 1 pc.
- Hand stabilizing cuff - 1 pc.
- Adapter to tensioner mechanism - 1 pc.
- Extending side table for operations on arm - 1 pc.

Set of additional accessories for ENT and ophthalmology surgeries

Special-use accessories for ENT ophthalmology allow patient head positioning on adjustable U-shaped rest with soft cushioning or soft ring-shaped cushion. Optimal head positioning by 3 axis and angle. Set includes removable, adjusted by height, U-shaped rest for arm of surgeon. Assembly of light forms with simple joints, easy to adjust and to use.

Delivery set:
Support bracket — 1 pc.
Vertical mounting console — 1 pc.
Cross rail — 1 pc.
Surgeon wrist (arm) rest — 1 pc.
Stand — 1 pc.
Ring-shaped cushion base — 1 pc.
Padding disk — 1 pc.
Ring-shaped cushion — 1 pc.
Adjusting U-shaped head rest (left and right sided) — pair.
Set of neck cushions (left and right) — pair.
Table mounted adapter — 1 pc.
Surgeon arm rest — 1 pc.

Set for operations with lower positioning of arm

Set mounted on side rails of operating table by in-built clamp. Stainless steel metallic elements. Seamless padding made of integral polyurethane with antistatic coating.

Delivery set:
- Radial tooth-type clamp - 1 pc.
- Arm rest - 1 pc.
- Supporting bracket - 1 pc.

Set for operations with upper positioning of arm

Set mounted on side rails of operating table by radial tooth-type fixture, adjusted by height and angle. Use of ball type fixture allows smooth arm positioning of patient. Stainless steel metallic elements. Seamless padding made of integral polyurethane with antistatic coating.

Delivery set:
- Radial tooth-type clamp — 1 pc.
- Arm rest with supporting bar — 1 pc.

Set of additional accessories for surgeries requiring operating table extension

Additional 400 mm R-section, radiolucent, antistatic coating, allows substantive shift of pelvic zone of patient outward table column and wide access of X-ray unit. Molded padding made of integral polyurethane with antistatic coating, stainless steel support components.

Delivery set:
- Frame — 1 pc.
- Pad — 1 pc.
- Clamping screw — 2 pcs.

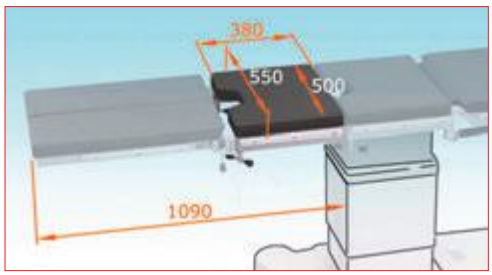

Set of additional accessories for surgeries requiring operating table extension

Set mounted on operating table top side rails. Molded padding made of integral polyurethane with antistatic coating, stainless steel support components.

Delivery set:
- Support - 1 pc.
- Pad - 1 pc.

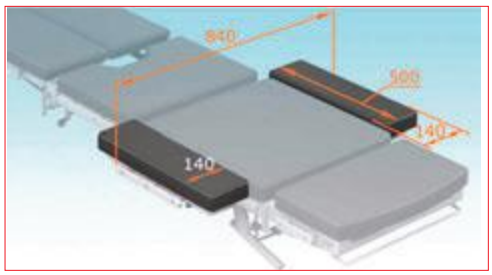

Set of additional accessories for surgeries requiring operating table extension

- Addition to operating table.
- Steel metallic elements.

Delivery set:
160 mm extension bar - 1 pc.
260 mm extension bar - 1 pc.
460 mm extension bar - 1 pc.

Set mobile stand for storage of removable accessories

Light mobile stand used for pacing (storing) of basic and special purpose accessories to KLAROMED operating tables. Stand frame made of profiled stainless tubes and mounted on castors, two equipped with brakes. Includes holding elements - 10x25 mm profiled bars, 26x26 mm, 37x37 mm, 14x33 mm sockets and bottom plate.

Delivery set:
- Leg support - 1 pc.
- Radial tooth-type clamp - 1 pc.

UNIVERSAL ACCESSORIES FOR OPERATING TABLES

Multi-operational surgery arm for patient positioning

Cat. No. K75001

Increase operating room performance and productivity with the new portable arm and hand positioner. With no foot pedals, hoses, hydraulics or power cords around the operating room table, arm combines strength and flexibility when intra-operatively adjusting the operative limb. Newly designed with global clamp to fit all OR table side rails.

Because arm maintains steady positioning from start-to-finish, the whole surgical team can focus on the open or arthroscopic limb procedure – no need to have the surgical aid hold the patient's limb during the procedure!

Great for beach chair or lateral position and now available– accessories for elbow, wrist, knee or ankle surgery.

Features

- With no foot pedals, hoses, hydraulics or power cords around the operating room table, Schure Loc™ XPS combines strength and flexibility when intra-operatively adjusting the operative limb
- Single lever releases all six joints for unlimited varied positioning and relocks instantly when released
- Smooth, effortless positioning enhances operative site exposure
- Schure Loc™ XPS attaches easily to any side rails that are within the following dimensions:
  Rail Width Size: .6 mm - 10 mm
  Rail Height Size: .25 mm - 38 mm
- Convenient Kit includes a sterile drape, foam hand/forearm holder and self-adherent wrap
- 227kg patient weight capacity

Weights & Dimensions:

- Maximum Length: 97 cm +/- 1 cm
- Maximum Reach: 103 cm +/- 1 cm
- Minimum distance from side/rail: 17 cm +/- 1 cm
- Net Weight, Arm Only: 15.6 +/- .22 kg
- Net Weight with Adapter and Forearm Attachment: 6.5 +/- .22 kg
- Gross Weight: 9.5 +/- .22 kg

Surgical Stirrups

Cat. No. K75200

Increase your surgeons' operating room performance with the which permit simple adjustment of lithotomy and abduction intraoperatively. Exclusive axial rotation from the handle for superior patient positioning. Range of motion is -30° low lithotomy to 75° high lithotomy. Adduction 9°, abduction 25° and also externally rotates out 20°, with the control to lock the stirrup anywhere in between. Ships fully assembled. Boot pads are included. Two required Surgical Stirrups sold separately.

- Exclusive axial rotation from the handle for superior patient positioning
- A wide boot and a stronger gas cylinder make this stirrup perfect for your heaviest patients
- Boot free-floats throughout each range reducing the risk of superficial nerve injury
- Lithotomy and length indicators help to position and reposition the legs
- Extended lateral boot design helps reduce the risk of peroneal nerve injury

- Supports equipped with soft inserts for comfortable shoes.
- Squeezing the handle allows easy horizontal and vertical adjustment.
- Universal accessory mounted on side rails - fits any operating table.

Parameters:

- Load capacity - adapted to a patient weighing 181 kg (higher load capacity and pediatric option)
- Support weight 2.3 kg
- Height 36 cm
- Length 110 cm
- Width 60 cm

Surgical Beach Chair

Cat. No. K75300

Position patients for shoulder surgery with this lightweight and cost-effective surgical beach chair that adjusts from 0-90° with a powerful piston system that assists O.R. staff when lifting the patient into position. A safe and secure option to our fully-powered shoulder surgery chair system.

Features

- Significantly reduces effort by O.R. staff when lifting patients over other manual systems
- 227 kg surgical patient weight capacity
- Articulation range 0-90°
- Sliding head rest conforms to every patient
- Lateral brace included
- Double-ball joint head system safely secures patient's head
- Five-piece Deluxe pad set included
- Dimensions: 711 mm x 762 mm x 1193 mm
- Weight: 14.5 kg

Support for knee arthroscopy

Cat. No. K75400

Support for knee arthroscopy offers a high-quality leg holder to secure the foot during knee surgeries. It easily mounts to operating table room side rails, letting the surgeon replace the entire knee while the patient's foot is held firmly in place.

- Disposable and conductive foot pad included
  Not made with natural rubber latex
- Now available in radiolucent, clear Lexan as well
- Patient's well-leg lies flat
- 31 cm x 46 cm x 5 cm Post
- Adjustable horizontally and vertically on the clamp.
- Universal accessory for rail mounting side - fits any operating table.

Carbon hand table with adjustable leg

Cat. No. K75700

Carbon hand table with adjustable leg for arm and hand surgery, clamps and locks to standard operating room tables in seconds. Adjusts up or down to be level with the O.R. table quickly and securely. Extremely durable and lightweight – easy-to-use and radiolucent.

- Lightweight & Radiolucent Carbon Fiber
- Table measures 15”W x 34”L (38 cm x 86 cm)
- Radiolucent for all C-arm x-ray images
- Height-adjustable leg w/twist handle locking system
- (3 cm) Deluxe foam pad & Leg included

Lateral Positioners (set of 3)

Cat. No.K75600

With the assistance of lateral positioners, surgical teams can prepare patients effectively in side-lying positions before surgeries and operative procedures. Lateral patient positioners will ensure that patients maintains position comfortably, while keeping critical points of the body fully accessible by the surgeon on the OR table.

- Simple to set up and easy to use
- Adjustable with one lever on the double ball joints
- Fast attachment to all standard operating tables
- Included: 2 pcs side support, 1 pc support pubic and side rail clamps

Universal Prepper Pad

Cat. No. K73002

The Universal pad safely and effectively holds upper and lower extremities using a unique pivoting design that allows for infinite positioning to suit orthopedic procedure needs. Comes complete with 5 cm thick deluxe pad.

- Supports limbs of all sizes
- Pad removes for easy cleaning

Multi-Axis Arm Positioner

Cat. No. K73003

Versatile and comfortable patient positioning for surgical procedures in seated, lateral, prone, neuro and park bench positions. New ball socket locking system for every patient size and position.

- Arm platform measures 15 cm x 41 cm
- 1.6 cm Mounting Post
- 5 cm deluxe concave foam pad included

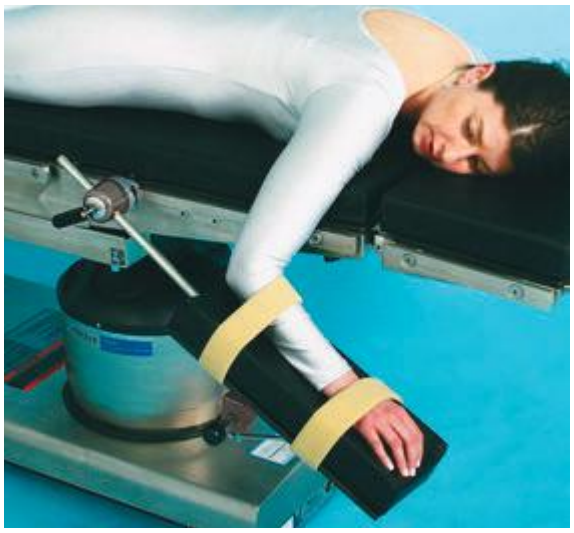

Knee Crutches

Cat. No. K73004

Facilitate a wide-range of patient positions for surgery with this style of leg holders that adjust vertically from 31 cm - 48 cm and rotate 360º to provide precise patient positioning with a simple, ergonomic, locking handle.

- Constructed of highest-quality stainless steel
- Extremely soft and comfortable crutch liners prevent superficial nerve damage to the patient
- Mount to side rail quickly and securely
- Knee crutch pads included

Juliusz operator's seat

Cat. No. K75600

- Electric operator's seat with two steering controls buttons on the base
- Seat adjustment up / down 460mm-600mm
- Front / rear back adjustment 0 ° -7 ° and height
- Armrests up / down adjustment 78mm and rotation 360 °
- Four 100mm double wheels
- Weight 30 kg

Radiographic operating table with carbon fiber top HERKULES

Cat. No. K71007

- Best solution for wide range of X-ray surgery diagnostic and treatment procedures with the use of C-arm unit and as a part of an angiographic complex;
- Carbon fiber top, high durability, low X-ray absorption and radiation exposure;
- Height, longitudinal tilt, lateral tilt adjustments as well as longitudinal, lateral and diagonal shifts done with the help of electric drives impelled by remote control;

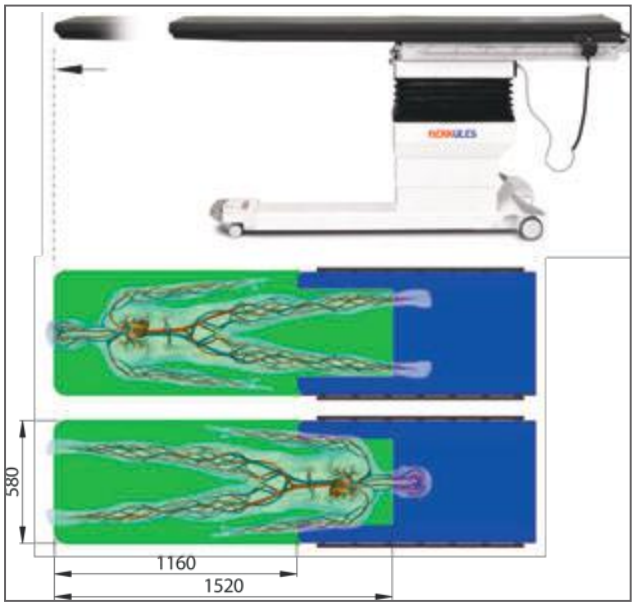

X-ray Transparent Area (colored in green)

Console, remote control and control joystick

Use of the C-arm X-ray unit

Instrument table (accessory)

- Operation control through 2 corded consoles, joystick and pedals;
- Option to integrate the table to an angiographic complex;
- Antidecubitus padding with antistatic coating for maximum patient comfort;
- Long-lasting self-powered operation, increased battery capacity;
- Equipped with set of accessories for general surgery;
- Warranty 24 months

KLAROMED manufacturer

Safe working load 220 kg

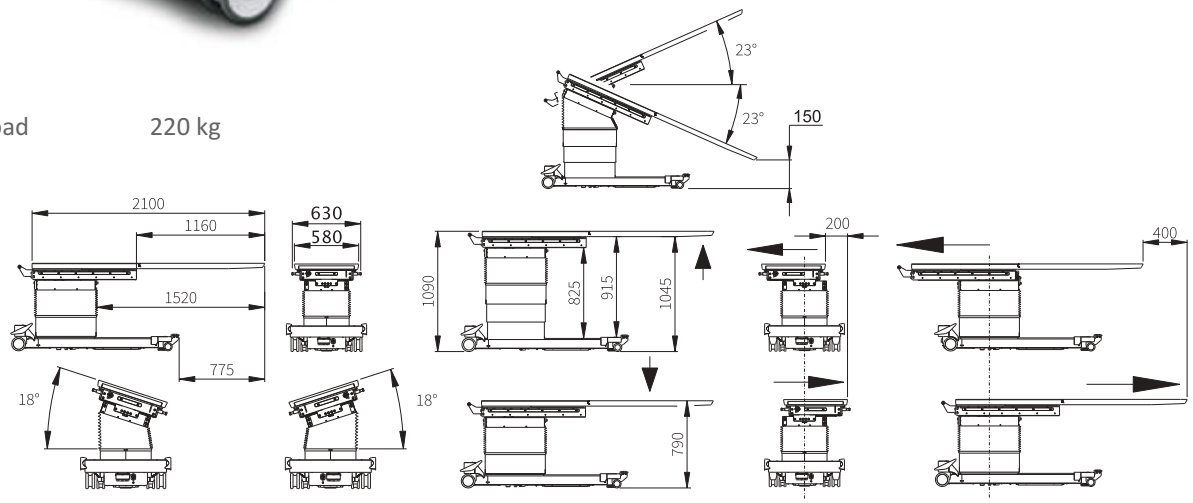

Automatic transporter - SENTER

Cat. No. K00700

• SENTER is a unique product for fast, automatic patient transfer without use physical strength of medical personnel

• SENTER is especially useful wherever hospital staff are dealing with patients whose diseases or injuries do not allow them to be lifted, lifted or supported, eg: fracture, spine injury, internal hemorrhage or require specific

Benefits:

- Electromechanical height adjustment and extension and retraction of the transfer plate
- Easy handling when moving the patient
- Reduced risk of patient and hospital staff injuries during transfer
- Height adjustment to fit all common beds and tables
- Central braking system that is blocked during patient transfer
- Folding side rails to ensure patient safety during transport
- Directional wheel and its own battery-powered drive system

1 - downloading the patient to SENTER on "red line "and transportationin the operating theater

2- Automatic patient transfer from SENTERA to operating table

4- Automatic transfer of the patient after waking up from bed to SENTER and transport to the "red line" where there will be an automatic transfer to the ward bed

3- Automatic transfer of the patient to SENTER after treatment and transport to the recovery room, where it will be automatically translated into a recovery bed

Technical data:

External dimensions (L x W):	2140 x 810 mm
Height:	600 ÷ 930 mm
Transfer plate ejection:	600 mm
Plate speed:	30 mm / s
Maximum load:	250 kg
Drive system: wheels diam.	200 mm + direction wheel
Braking system:	central brake
Supply voltage:	24 V
Charging voltage:	230 V, 50 Hz
Weight:	300 kg

KLAROMED

Gynecology
& Obstetrics

Manufacturer

KLAROMED

Gynecological Examination Chair ADARA 84
Gynecological Examination Chair BELLATRIX 85
Gynecological chair VEGA 86
Obstetric bed PEGAZ 88
Obstetric Aid Table CARINA 90

Gynecological Examination Chair ADARA

Cat. No. K71001

- Electro-mechanical height, back and seat positioning adjustment
- Enhanced options up to operating table level

Safe working load: 140 kg
Weight: 130 kg

Colposcope holder (accessory)

Stand for continuous infusions and injection plate (accessory)

Leg section (optional)

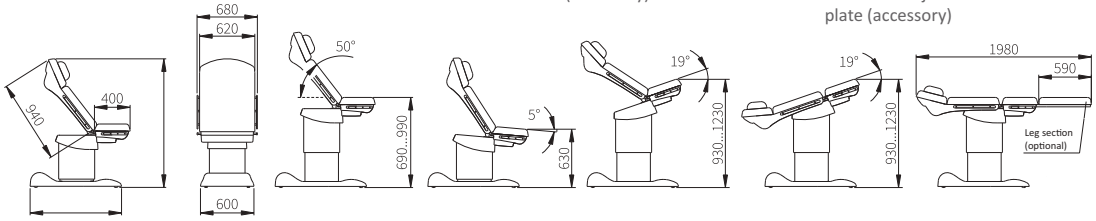

Gynecological Examination Chair BELLATRIX

Cat. No. K71002

- Electromechanical seat height and tilt adjustment

Safe working load: 140 kg
Weight: 115 kg

Uchwyt na kolposkop
(opcja)

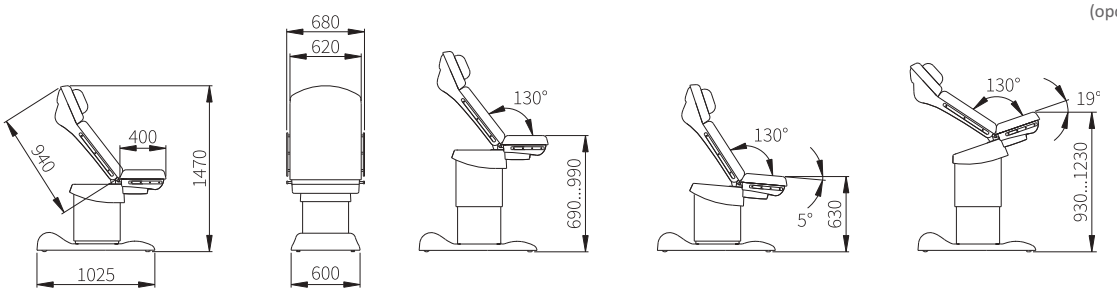

Gynecological chair VEGA

Cat. No. K71003

- Pneumatic adjustment of the inclination of the back and seat sections

Safe working load: 140 kg
Weight: 85 kg

Leg section (optional)

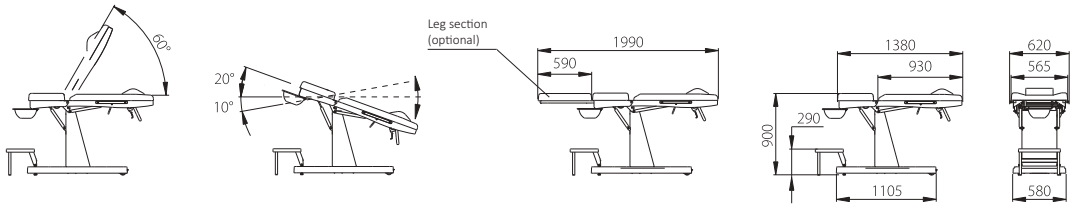

COLOR PALETTE

Upholstery Classic Series*:

yellow saffron (1017)

beige (1044)

yellow (1123)

bright emerald green (6001)

cyan (6021)

mint green (6156)

dark pink (3036)

amethystine (5161)

ultramarine (5061)

blue (5154)

black (9011)

grey (7000)

Upholstery Comfort Series*:

caffe latte (3657)

sandy (2562)

ivory (2207)

beige (1224)

pistachio green (6163)

ruby (3198)

Palette of colours for metal elements*

white (9016)

sand (1015)

yellow saffron (1015)

river perl (7035)

fuchsia (4003)

azure blue (5012)

aquamarine (6027)

NOTE! Physical colours may vary from graphical prints or screen images, which do not provide an exact match

Obstetric bed PEGAZ

Cat. No. K71012

The Klaromed obstetric bed provides the patient with maximum freedom of movement during each stage of labor. The bed is comfortable, has ergonomic shapes and a strong structure. Thanks to the use of advanced materials, it is easy to clean and disinfect. 4 electric drives ensure smooth operation.

Technical data :

- Adjustment of bed height, Trendelenburg/ anti Trendelenburg, the back section and the height of the legs are operated by a remote control or side panel
- Safe working load: 230 kg
- Height adjustment: 580 - 955mm
- Trendelenburg / anti-trendelenburg: ± 15˚
- Back rest adjustment: + 78˚
- Back rest adjustment: + 78˚
- Adjustment of leg rest: + 16˚
- Adjustment of armrests: 45º
- Leg section tilt: adjustable with a pneumatic spring
- Dimensions of the bed: 1900 x 780 x 100 mm
- Power supply: 230 V, 50 Hz

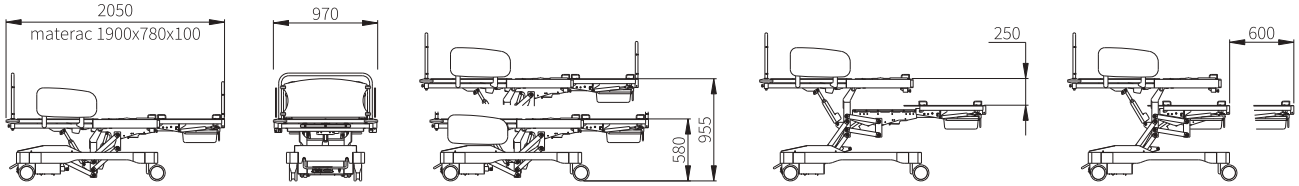

Removable side railings

Bed positioning

Remote controls

Feet rests

Side railings down motion

Table for a newborn

Trolley for accessories

Injection plate (accessory)

Overhead loop (accessory)

Screen table (accessory)

Stand for infusions (accessory)

Basket for magazines (accessory)

Pedal control (accessory)

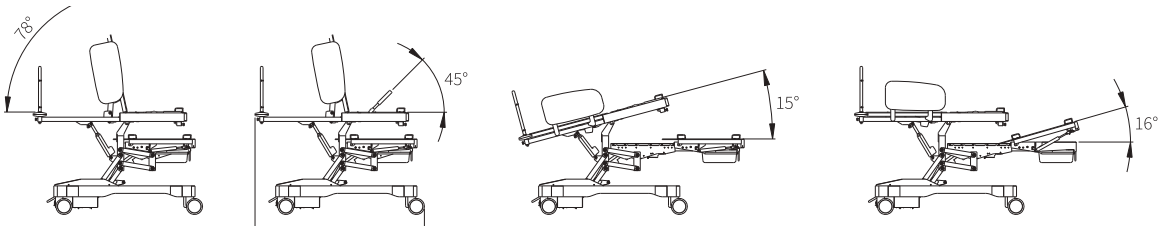

Obstetric Aid Table CARINA

Cat. No. K72003

Obstetric aid table (birthing bed) with unique and reliable technical design. It provides a wide range of adjustments to provide great comfort for women in labor as well as for assisting medical personnel. The table can be positioned to conduct procedures in "sitting" or "lying" position. Ergonomic mattresses designed to gives a great sense of comfort and safety to women in labor.

Table design provides easy operation, fast manipulation and easy cleaning.

"Chair" position

Features:

- Three stepless independent electric motors for height, back rest and longitudinal tilt adjustments;
- Metal parts of the accessories made of stainless chromium-nickel steel;
- Removable, anti-static, seamless, molded polyurethane foam mattresses made with antibacterial ASP technology;
- Chassis and column are protected by heavy duty composite plastic covers;
- Detachable hand grips can freely move on side rails for maximum comfort of the patient;
- Detachable gynecological basin can freely move on side rails and locked in necessary position;
- Wheeled chassis with Ø 100 mm castors with central brake;

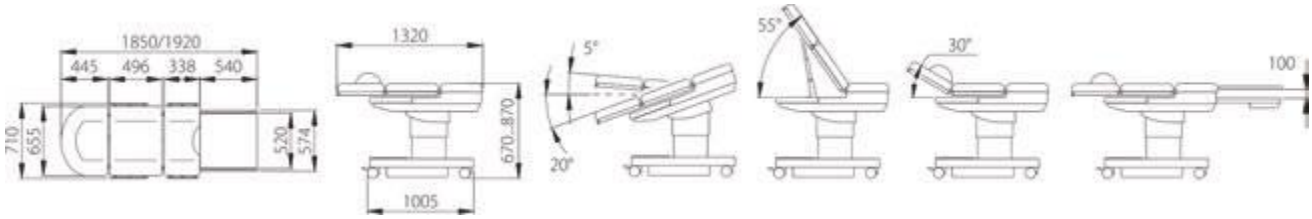

"Table" position

Safe working load 200 kg
Table weight 170 kg

KLAROMED

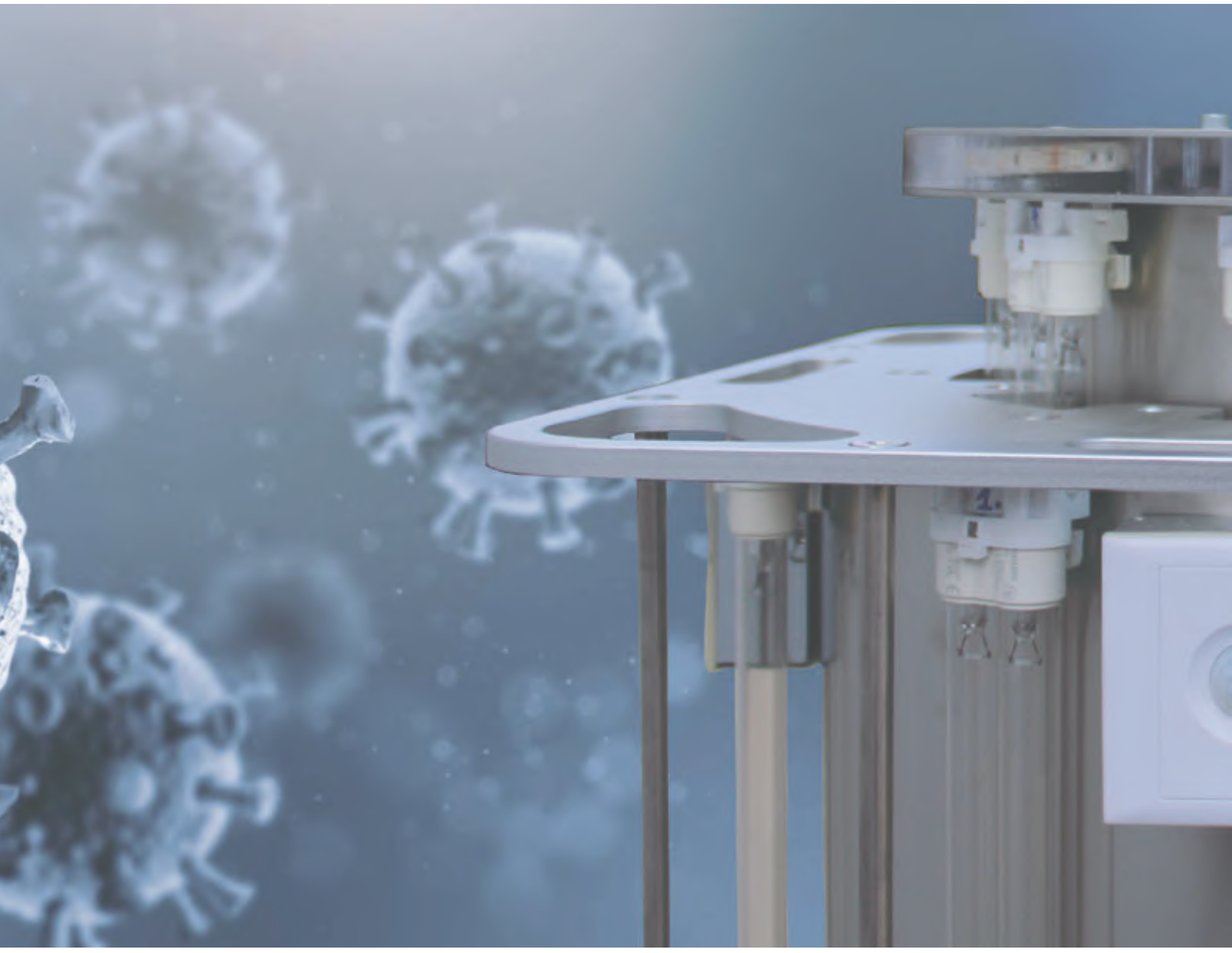

Decontamination

solutions to combat with COVID-19

Manufacturer

KLAROMED

KlaroFoG- decontamination with hydrogen peroxide 94
KlaroUVLight - UV-C decontamination robot 96

KlaroFoG- decontamination with hydrogen peroxide

Nr kat. K79001

Nosocomial infections caused by microbes living in hospitals are one of the most serious problems health is care facing. Many species of microorganisms have the ability to survive in a hospital environment for a long time, both in vegetative and spore form.

Pathogens living in the hospital environment lead to more and more frequent complications that extend the hospitalization of the patients and, in the worst cases, they can cause premature death. The quality of surface cleaning and disinfection using classical methods in medical facilities is not sufficient. Despite the introduction of increasingly better procedures related to the hand disinfection regime by medical personnel, as well as thorough disinfection of equipment and surfaces by cleaning staff, achieving better results is not possible without the help of the latest technologies.

The biocidal properties of hydrogen peroxide have been known to mankind for generations. However, the use of the gaseous form of hydrogen peroxide is one of the modern and most effective techniques for decontamination of various types of closed spaces. Gaseous hydrogen peroxide has a very high efficiency in the elimination of microorganisms suspended in the air and found on various surfaces.

A mobile device for rooms decontamination with a gas form of hydrogen peroxide at a concentration of 12%.

Hydrogen peroxide does not condense on surfaces, it tightly and evenly fills rooms, effectively reaching all surfaces, including hard-to-reach surfaces.

Technical data :

- Weight 63 kg.
- Max dimensions: width 55cm, length 60cm, height 106cm.
- A mobile device equipped with four wheels, including two with a brake and a swivel.

Features of the device

- Possibility of rooms decontamination with a cubature up to 400 m3
- The active (biocidal) substance is dosed automatically.
- The diffusion time is approx. 4 m3 / min.
- The highest possible level of microbiological protection of medical facilities.
- Documented biocidal effectiveness: fungi, viruses, bacteria, spores.
  Reduction of microorganisms at the level of 6 Log confirmed by tests carried out by the Nicolaus Copernicus University in Toruń.
- Compatibility of the active agent allowing for decontamination of rooms, including furniture, apparatus, electronic equipment, LCD / LED screens, and electrical installations.
- The decontamination process carried out with the use of the device is completely safe for the hospital staff operating the device, as well as for the environment.
- After the decontamination process, there are no residues of toxic substances, sediments or liquidsIntuitive use through a color, 4-inch touchscreen control with a menu in Polish, English, German.
- Electronic tracking and history archiving of the entire process (possibility of printing on a peripheral device).
- The device creates an intuitive in use database of the last 500 processes. Remembering the last 10 processes in PDF format.
- The ability to connect via the built-in wi-fi and LAN module with peripheral devices (smartphone, tablet, laptop, etc.) allows you to track individual phases of the process and control it from the outside of the decontaminated room.
- Memorization of operators for easy identification. Logging in with the RFID key and PIN code eliminates the possibility that the device would be operated by unauthorized and untrained persons.
- The possibility of storing 500 rooms in the system (just measure the room once and enter the data). The ability of intuiti vely creating systems naming for individual buildings, departments and rooms.
- The delay of starting the process can be programmed. The ability to start the remote device from outside the room after connecting to the decontamination chamber system.
- Built-in NFC reader that downloads and writes information from hydrogen peroxide containers.

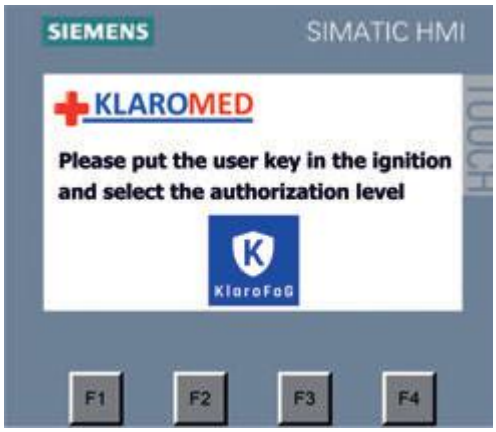

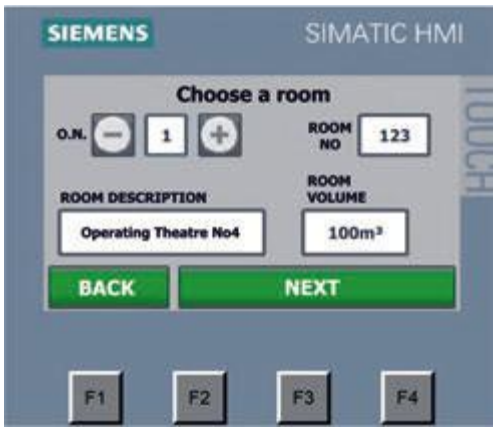

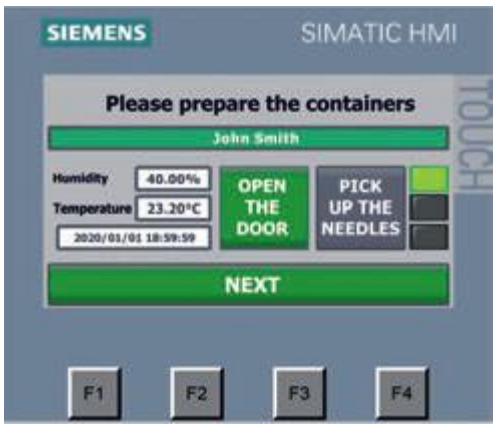

KlaroUVLight - UV-C decontamination robot

Nr kat. K69100

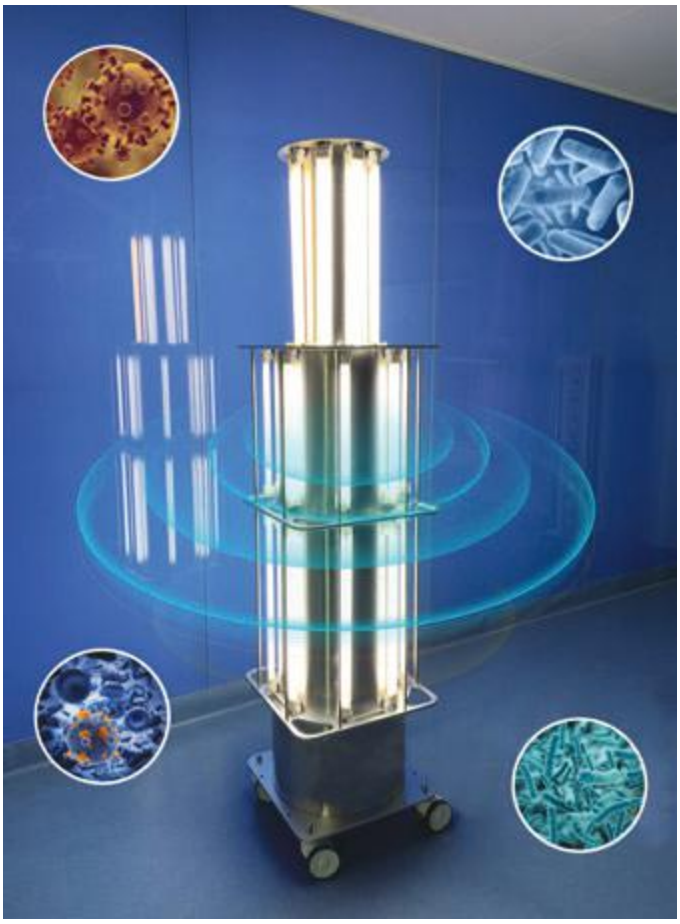

The KlaroUVLight disinfecting robot is a specially designed device that prevents infection related to health care. Used decontamination method is based on radiation UV (254nm UVC), which eliminates microorganisms naturally occurring in the air through decay DNA nucleic acid in prokaryotes bacterial cells and DNA nucleic acid or RNA contained in the capsids of viruses.

The KlaroUVLight robot is widely used in medical facilities of various profiles provided services, that in a special way are exposed to the presence of microorganisms (including methicillin-resistant MRSA strains).

The KlaroUVLight robot does not emit ozone, it does not emit toxic substances and leaves no dangerous waste. Increasing microbiological air purity, it protects patients and employees of the health service units against infections, which has a significant impact to improve the quality of their services.

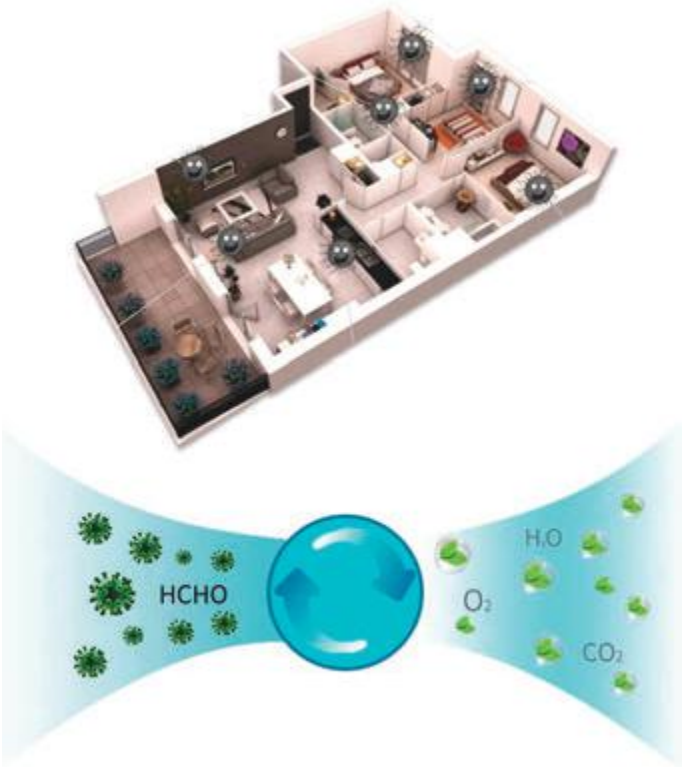

Laboratory studies (SGS tests performed in September 2015) shows that irradiation with UVC rays for 15 minutes removes over 99.99% of microorganisms occurring on the surface and in the air within a 3 meters radius from the device.

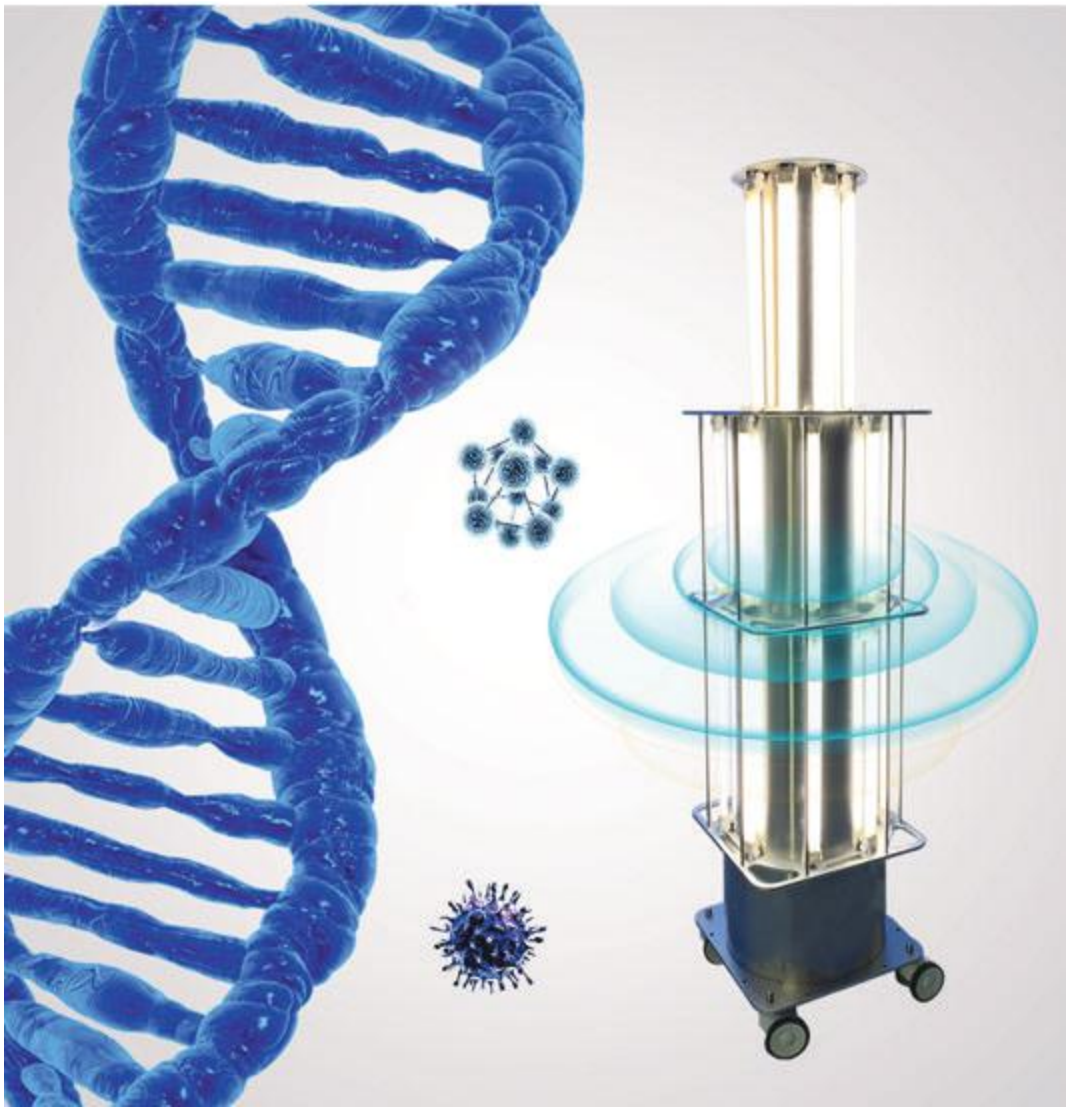

KlaroUVLight has:

- 4-color LED diodes that can be changed during the process, informing about the current status of the device's operating mode: internal device test, ready for operation, decontamination, end of work
- Motion sensors to prevent the risk of a sudden appearance of a person in the treated irradiation area during the decontamination process
- Wireless control of the device using the tablet attached to the device
- 4 wheels, 100mm in diameter, two with a lock
- Emergency shutdown button of the device
- Emergency decontamination start switch for 10 minutes with no tablet

Power Supply	AC230V + 10%, 50Hz
Input Power(W)	1280
Dimensions	48cm * 48 cm * 195 cm
Lamps	24 high-power mercury lamps
Lamp life	8 000 h
Temperature	10 °-40 ° C
Ambient humidity	10-80%

KLAROMED

KLAROMED manufacturer

medical furniture catalogue KLAROLINE

Medical furniture
KLAROLINE

Manufacturer

KLAROMED

Description of technology medical furniture KLAROLINE 101
Medical furniture made of powder-coated steel 102
Medical metal furniture with body based on aluminium profile 122
Medical metal furniture with ECO body 138
Medical furniture made of stainless steel AISI 304 156
Accessories 176
Mobile medical furniture..... 186

TOP CABINET PANEL increased hygiene of the furniture
FRONTS equipped with all-round one-piece door seals, made of durable elastic silicone in light color Increased furniture tightness
HINGES with 160° opening angle with integrated deceleration & self-closing mechanism
Rasters for adjusting the height of the shelves - every 25mm
OVAL RECESS under the handle Convenient opening
DOUBLE-WALLED structure with noise-damping & moisture-proof insulation, no empty, metallic sound
SYSTEM DRAWERS fully-extendible with soft-closing Increased comfort of use
Shelves based on extruded brackets, equipped with silicone overlays - to ensure a stable fit and secure for shelf against falling out
Integrated carrying plinth. Full tightness and hygiene of the furniture

DESCRIPTION OF TECHNOLOGY MEDICAL FURNITURE KLAROLINE

Modular medical furniture system proposed by Klaromed consists of four lines, where three of metal furniture lines are varied in price and one line is made entirely of stainless steel AISI 304.

Common features of medical metal furniture are:

- **the plinth:** high cabinet & cabinet body has an integral four-sided plinth, permanently welded to the body of the furniture. For the User's convenience, the plinth has been retracted from the front lower edge of the body. The plinth is additionally equipped with height adjusters leveling the furniture;
- **top cabinet panel:** high cabinet & suspended cabinet body has the top panel, called because of its function as top finishing plinth, made of double sheet in a doublewalled system with slightly stiffening & noise-damping insulation. The top cabinet panel is externally extruded from the frame of the body so as to create a flush surface with the outside surface of the furniture fronts.
- **high cabinet, cabinet & drawer fronts** made of double zinc plated varnished sheet, powder-coated with silver ions active ingredients - natural antibacterial agent IGP-DURA®care, supporting work against hospital infections. Doors & drawers fronts equipped with all-round one-piece door seals, structurally associated with fronts made of durable elastic silicone in light color. Fronts construction ensure dust-tight & soft closing. Comfortable "C" shaped handles, made of zinc alloy & aluminum with a matte stainless-steel effect. Oval recess under the handle for easy gripping. Depending on the needs, glazed door with safety glass. The door equipped with hinges alloving to adjust front elements in all directions, creating opening angle of 160°.

The body is the element distinguishing our lines of metal furniture, which depending on the technology can be made of:

-• **double galvanized sheet in double-walled system** with moisture resistant, stiffening & noise-damping insulation. The back wall & bottom of the body of cabinet made in the same noise-damping technology. Smooth internal walls of high cabinets and cabinets are structurally equipped with specialized rails (rasters) enabling easy adjustment of the height of the position of the inside mounted components such as shelves, baskets and cuvettes.

- **electrolytically-insulated aluminum profiles** coated with silver-ion-enriched powder coatings - natural antibacterial agent IGP-DURA®care. Profiles filled with high-strength double-sided laminated board. Individual cabinets are self- supporting frame structures made of aluminum profiles joined by means of high-impact ABS plastic joints. The way of fixing furniture framing makes it easy to remove and reassemble a piece without damaging the rest of the furniture. Internal walls of high cabinets and cabinets are structurally equipped with specialized rails (rasters) enabling easy adjustment of the height of the position of the inside mounted components such as shelves, baskets and cuvettes.
- **high-strength double-sided laminated board** with hygienic certification. Internal walls of high cabinets and cabinets are structurally equipped with specialized rails (rasters) enabling easy adjustment of the height of the position of the inside mounted components such as shelves, baskets and cuvettes.

After installation, the furniture is sealed to the walls by silicone. The housing is one surface, easy to clean and disinfect.

KLAROMED

KLAROMED manufacturer

medical furniture KLAROLINE®

Medical furniture
made of powder-coated steel

Manufacturer

KLAROMED

Metal medical furniture made of powder-coated steel
Technology and benefits:

- Furniture made of galvanised metal sheet powder-coated with paint enriched with silver ions - the natural antibacterial agent IGP-DURA®care.
- Front and body made in double-walled system with moisture resistant, stiffening and noise-damping insulation.
- The inside walls of cabinets equipped with rasters that allow adjustment of shelf height every 25 mm.
- Drawers mounted on roller slides with full extension and self-closing mechanism.
- Hinges that allow the door to open 160°.
- Cabinets have four-sided, permanently integrated metal plints, with leveling capabilities.
- Cabinets and wall cabinets equipped with a top plinth.
- Fronts with silicone seals equipped with "C" shaped handles. Under the handles oval embossing - making it easier to grab.
- Glazed door equipped with safety glass.
- Worktops made of acid resistant steel or composite mineral conglomerate with wall boards.
- After the assembly, the furniture is tightly siliconed - the building is one surface, easy to clean and disinfect.
- A variety of cabinet configurations and a wide range of accessories (shelves, baskets, drawers, trays in sizes according to DIN or ISO standards) make it possible to adapt the construction to specific tasks and customer needs.

OPEN TYPE HANGING CABINETRY

Cat. No. KL104 103

Single-compartment wall cabinetry
2 x adjustable shelf

Dimensions (mm)*		
W	D	H
400x300x720mm		
500x300x720mm		
600x300x720mm		

OPEN TYPE HANGING CABINETRY

Cat. No. KL104 205

Single-compartment wall cabinetry
2 x adjustable shelf

Dimensions (mm)*		
W	D	H
800x300x720mm		
900x300x720mm		
1000x300x720mm		

SINGLE-DOOR GLAZED HANGING CABINETRY

Cat. No. KL104 102

Single-compartment wall cabinetry
1x glazed door
2 x adjustable shelf

Dimensions (mm)*		
W	D	H
400x300x720mm		
500x300x720mm		
600x300x720mm		

DOUBLE-DOOR GLAZED HANGING CABINETRY

Cat. No. KL104 101

Single-compartment wall cabinetry
2 x glazed door
2 x adjustable shelf

Dimensions (mm)*		
W	D	H
800x300x720mm		
900x300x720mm		
1000x300x720mm		

SINGLE-DOOR HANGING CABINETRY

Cat. No. KL104 202

Single-compartment wall cabinetry
1x full door
2 x adjustable shelf

Dimensions (mm)*		
W	D	H
400x300x720mm		
500x300x720mm		
600x300x720mm		

DOUBLE-DOOR HANGING CABINETRY

Cat. No. KL104 201

Single-compartment wall cabinetry
2 x full door
2 x adjustable shelf

Wymiary (mm)*		
W	D	H
800x300x720mm		
900x300x720mm		
1000x300x720mm		

Metal mediacal furniture made of powder-coated steel

OPEN TYPE CABINET

Cat. No. KL103 105

Single-compartment cabinet
1 x adjustable shelf
Worktop made of stainless-steel AISI 304
with noise-damping insulation.

Dimensions (mm)*		
W	D	H
400x600x900mm		
500x600x900mm		
600x600x900mm		

SINGLE-DOOR CABINET

Cat. No. KL103 101

Single-compartment cabinet
1 x full door
1 x adjustable shelf
Worktop made of stainless-steel AISI 304
with noise-damping insulation.

Dimensions (mm)*		
W	D	H
400x600x900mm		
500x600x900mm		
600x600x900mm		

SINGLE-DOOR CABINET WITH DRAWER

Cat. No. KL103 102

Double-compartment cabinet
1 x full-extension drawer
1 x full door
1 x adjustable shelf
Worktop made of stainless-steel AISI 304
with noise-damping insulation

Dimensions (mm)*		
W	D	H
400x600x900mm		
500x600x900mm		
600x600x900mm		

TWO-CARGO DRAWERS CABINET

Cat. No. KL103 108

Double-compartment cabinet
2 x cargo drawer
Worktop made of stainless-steel AISI 304
with noise-damping insulation.

Dimensions (mm)*		
W	D	H
600x600x900mm		
800x600x900mm		
900x600x900mm		

TWO DRAWERS CABINET

Cat. No. KL103 109

Single-compartment cabinet
2 x full-extension drawer
Worktop made of stainless-steel AISI 304
with noise-damping insulation

Dimensions (mm)*		
W	D	H
400x600x900mm		
500x600x900mm		
600x600x900mm		

THREE DRAWERS CABINET

Cat. No. KL103 103

Single-compartment cabinet
3 x full-extension drawer
Worktop made of stainless-steel AISI 304
with noise-damping insulation

Dimensions (mm)*		
W	D	H
400x600x900mm		
500x600x900mm		
600x600x900mm		

FOUR DRAWERS CABINET

Cat. No. KL103 104

Single-compartment cabinet
4 x full-extension drawer
Worktop made of stainless-steel AISI 304
with noise-damping insulation

Dimensions (mm)*		
W	D	H
400x600x900mm		
500x600x900mm		
600x600x900mm		

FIVE DRAWERS CABINET

Cat. No. KL103 107

Single-compartment cabinet
5 x full-extension drawer
Worktop made of stainless-steel AISI 304
with noise-damping insulation

Dimensions (mm)*		
W	D	H
400x600x900mm		
500x600x900mm		
600x600x900mm		

*dostępne inne wymiary na zamówienie

DOUBLE-DOOR CABINET

Cat. No. KL103 201

Single-compartment cabinet
2 x full door
1 x adjustable shelf
Worktop made of stainless-steel AISI 304 with noise-damping insulation

Dimensions (mm)*		
W	D	H
800x600x900mm		
900x600x900mm		
1000x600x900mm		

SLIDING-DOORS CABINET

Cat. No. KL103 205

Single-compartment cabinet
2 x full sliding door
1 x adjustable shelf
Worktop made of stainless-steel AISI 304 with noise-damping insulation

Dimensions (mm)*		
W	D	H
800x600x900mm		
900x600x900mm		
1000x600x900mm		

DOUBLE-DOOR CABINET WITH ONE DRAWER

Cat. No. KL103 206

Double-compartment cabinet
1 x full-extension drawer
2 x full door
1 x adjustable shelf
Worktop made of stainless-steel AISI 304 with noise-damping insulation.

Dimensions (mm)*		
W	D	H
800x600x900mm		
900x600x900mm		
1000x600x900mm		

DOUBLE-DOOR CABINET WITH TWO DRAWERS

Cat. No. KL103 202

Double-compartment cabinet
2 x full-extension drawer
2 x full door
1 x adjustable shelf
Worktop made of stainless-steel AISI 304 with noise-damping insulation

Dimensions (mm)*		
W	D	H
800x600x900mm		
900x600x900mm		
1000x600x900mm		

SINGLE-DOOR CABINET WITH THREE DRAWERS

Cat. No. KL103 203

Double-compartment cabinet
3 x full-extension drawer
1 x full door
1 x adjustable shelf
Worktop made of stainless-steel AISI 304 with noise-damping insulation.

Dimensions (mm)*		
W	D	H
800x600x900mm		
900x600x900mm		
1000x600x900mm		

SINGLE-DOOR CABINET WITH FOUR DRAWERS

Cat. No. KL103 204

Double-compartment cabinet
4 x full-extension drawer
1 x full door
1 x adjustable shelf
Worktop made of stainless-steel AISI 304 with noise-damping insulation.

Dimensions (mm)*		
W	D	H
800x600x900mm		
900x600x900mm		
1000x600x900mm		

SINGLE-DOOR CABINET WITH FIVE DRAWERS

Cat. No. KL103 207

Double-compartment cabinet
5 x full-extension drawer
1 x full door
1 x adjustable shelf
Worktop made of stainless-steel AISI 304 with noise-damping insulation.

Dimensions (mm)*		
W	D	H
800x600x900mm		
900x600x900mm		
1000x600x900mm		

SINGLE-DOOR CABINET WITH FIVE DRAWERS

Cat. No. KL103 208

Double-compartment cabinet
5 x full-extension drawer
1 x full door
Worktop made of stainless-steel AISI 304 with noise-damping insulation

Dimensions (mm)*		
W	Gł.	Wys.
800x600x900mm		
900x600x900mm		
1000x600x900mm		

SINGLE-DOOR CABINET

Cat. No. KL105 101

Single-compartment cabinet
1 x full door, lockable
5 x adjustable shelf

Dimensions (mm)*		
W	D	H
400x580x2100mm		
500x580x2100mm		
600x580x2100mm		

DOUBLE-DOOR CABINET

Cat. No. KL105 201

Double-compartment cabinet
2 x full door, lockable
4 x adjustable shelf

Dimensions (mm)*		
W	D	H
400x580x2100mm		
500x580x2100mm		
600x580x2100mm		

SINGLE-DOOR GLAZED CABINET

Cat. No. KL105 102

Single-compartment cabinet
1 x glazed door, lockable
5 x adjustable shelf

Dimensions (mm)*		
W	D	H
400x580x2100mm		
500x580x2100mm		
600x580x2100mm		

SINGLE-DOOR GLAZED CABINET

Cat. No. KL105 103

Single-compartment cabinet
1 x glazed door, lockable
5 x adjustable shelf

Dimensions (mm)*		
W	D	H
400x580x2100mm		
500x580x2100mm		
600x580x2100mm		

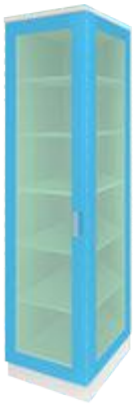

DOUBLE-DOOR GLAZED CABINET

Cat. No. KL105 202

Double-compartment cabinet
1 x glazed door, lockable
1 x full door, lockable
4 x adjustable shelf

Dimensions (mm)*		
W	D	H
400x580x2100mm		
500x580x2100mm		
600x580x2100mm		

DOUBLE-DOOR GLAZED CABINET

Cat. No. KL105 203

Double-compartment cabinet
1 x glazed door, lockable
1 x full door, lockable
4 x adjustable shelf

Dimensions (mm)*		
W	D	H
400x580x2100mm		
500x580x2100mm		
600x580x2100mm		

PASS-THROUGH CABINET

Cat. No. KL105 111

Single-compartment cabinet
2 x full door, lockable
5 x adjustable shelf

Dimensions (mm)*		
W	D	H
400x580x2100mm		
500x580x2100mm		
600x580x2100mm		

*other dimensions available on request

PASS-THROUGH GLAZED CABINET

Cat. No. KL105 213

Single-compartment cabinet
2 x glazed door, lockable
5 x adjustable shelf

Dimensions (mm)*		
W	D	H
400x580x2100mm		
500x580x2100mm		
600x580x2100mm		

WARDROBE

Cat. No. KL105 104

Single-compartment cabinet
1 x full door, lockable
2 x adjustable shelf
1 x hanger

Dimensions (mm)*		
W	D	H
400x580x2100mm		
500x580x2100mm		
600x580x2100mm		

PASS-THROUGH WARDROBE

Cat. No. KL105 112

Single-compartment cabinet
2 x full door, lockable
2 x adjustable shelf
1 x hanger

Dimensions (mm)*		
W	D	H
400x580x2100mm		
500x580x2100mm		
600x580x2100mm		

LOCKER CABINET

Cat. No. KL105 106

Four-compartments cabinet
4 x full door, lockable

Dimensions (mm)*		
W	D	H
400x580x2100mm		
500x580x2100mm		
600x580x2100mm		

PASS-THROUGH LOCKER CABINET

Cat. No. KL105 109

Four-compartments cabinet
10 x full door, lockable
5 x fix shelf

Dimensions (mm)*		
W	D	H
400x580x2100mm		
500x580x2100mm		
600x580x2100mm		

CATHETER CABINET

Cat. No. KL105 108

Single-compartment high cabinet
1 x full door, lockable
3 x retractable hanger for catheters
2 x adjustable shelf

Dimensions (mm)*		
W	D	H
500x580x2100mm		
600x580x2100mm		

LOCKER CABINET

Cat. No. KL105 116

Eight-compartments cabinet
8 x full door, lockable

Dimensions (mm)*		
W	D	H
800x580x2100mm		
900x580x2100mm		
1000x580x2100mm		

ENDOSCOPE GLAZED CABINET

Cat. No. KL105 107

Single-compartment high cabinet
1 x glazed door, lockable
2 x retractable hanger for endoscope
1 x drip tray
1 x container for endoscope accessories

Dimensions (mm)*		
W	D	H
500x580x2100mm		
600x580x2100mm		

ENDOSCOPE GLAZED CABINET

Cat. No. KL105 304

Single-compartment high cabinet
1 x glazed door, lockable
2 x retractable hanger for endoscope
1 x drip tray
1 x container for endoscope accessories

Dimensions (mm)*		
W	D	H
1000x580x2100mm		
1100x580x2100mm		
1200x580x2100mm		

WARDROBE

Cat. No. KL105 105

Double-compartment cabinet
2 x full door, lockable
4 x adjustable shelf
2 x hanger

Dimensions (mm)*		
W	D	H
800x580x2100mm		
900x580x2100mm		
1000x580x2100mm		

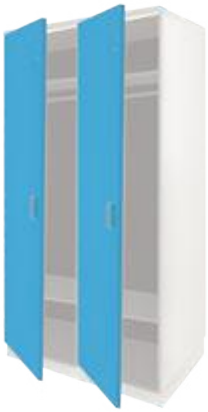

PASS-THROUGH WARDROBE

Cat. No. KL105 312

Double-compartment cabinet
4 x full door, lockable
4 x adjustable shelf
2 x hanger

Dimensions (mm)*		
W	D	H
800x580x2100mm		
900x580x2100mm		
1000x580x2100mm		

DOUBLE-DOOR CABINET

Cat. No. KL105 301

Single-compartment cabinet
2 x full door, lockable
5 x adjustable shelf

Dimensions (mm)*		
W	D	H
800x580x2100mm		
900x580x2100mm		
1000x580x2100mm		

PASS-THROUGH CABINET

Cat. No. KL105 315

Single-compartment cabinet
4 x full door, lockable
5 x adjustable shelf

Dimensions (mm)*		
W	D	H
800x580x2100mm		
900x580x2100mm		
1000x580x2100mm		

SLIDING-DOORS WARDROBE

Cat. No. KL105 311

Single-compartment cabinet
2 x full door
2 x adjustable shelf
1 x hanger

Dimensions (mm)*		
W	D	H
800x580x2100mm		
900x580x2100mm		
1000x580x2100mm		

SLIDING-DOORS CABINET

Cat. No. KL105 501

Single-compartment cabinet
2 x full sliding door
5 x adjustable shelf

Dimensions (mm)*		
W	D	H
800x580x2100mm		
900x580x2100mm		
1000x580x2100mm		

DOUBLE-DOOR GLAZED CABINET

Cat. No. KL105 302

Single-compartment cabinet
2 x glazed door, lockable
5 x adjustable shelf

Dimensions (mm)*		
Szer.	Gł.	Wys.
800x580x2100mm		
900x580x2100mm		
1000x580x2100mm		

*other dimensions available on request

DOUBLE-DOOR GLAZED CABINET

Cat. No. KL105 303

Single-compartment cabinet
2 x glazed door, lockable
5 x adjustable shelf

Dimensions (mm)*		
W	D	H
800x580x2100mm		
900x580x2100mm		
1000x580x2100mm		

FOUR-DOORS CABINET

Cat. No. KL105 401

Double-compartment cabinet
4 x full door, lockable
4 x adjustable shelf

Dimensions (mm)*		
W	D	H
800x580x2100mm		
900x580x2100mm		
1000x580x2100mm		

FOUR SLIDING-DOORS CABINET

Cat. No. KL105 601

Double-compartment cabinet
4 x full sliding-door
4 x adjustable shelf

Dimensions (mm)*		
W	D	H
800x580x2100mm		
900x580x2100mm		
1000x580x2100mm		

FOUR-DOORS GLAZED CABINET

Cat. No. KL105 402

Double-compartment cabinet
2 x full door, lockable
2 x glazed door, lockable
4 x adjustable shelf

Dimensions (mm)*		
W	D	H
800x580x2100mm		
900x580x2100mm		
1000x580x2100mm		

FOUR-DOORS GLAZED CABINET

Cat. No. KL105 403

Double-compartment cabinet
2 x full door, lockable
2 x glazed door, lockable
4 x adjustable shelf

Dimensions (mm)*		
W	D	H
800x580x2100mm		
900x580x2100mm		
1000x580x2100mm		

FOUR SLIDING-DOORS GLAZED CABINET

Cat. No. KL105 602

Double-compartment high cabinet
2 x full sliding-door
2 x glazed sliding-door
4 x adjustable shelf

Dimensions (mm)*		
W	D	H
800x580x2100mm		
900x580x2100mm		
1000x580x2100mm		

FOUR SLIDING-DOORS GLAZED CABINET

Cat. No. KL105 603

Double-compartment high cabinet
2 x full sliding-door
2 x glazed sliding-door
4 x adjustable shelf

Dimensions (mm)*		
W	D	H
800x580x2100mm		
900x580x2100mm		
1000x580x2100mm		

DOUBLE SLIDING-DOOR GLAZED CABINET

Cat. No. KL105 502

Single-compartment high cabinet
2 x glazed sliding-door
5 x adjustable shelf

Dimensions (mm)*		
W	D	H
800x580x2100mm		
900x580x2100mm		
1000x580x2100mm		

DOUBLE SLIDING-DOOR GLAZED CABINET

Cat. No. KL105 503

Single-compartment high cabinet
2 x glazed sliding-door
5 x adjustable shelf

Dimensions (mm)*		
W	D	H
800x580x2100mm		
900x580x2100mm		
1000x580x2100mm		

PASS-THROUGH FOUR-DOORS CABINET

Cat. No. KL105 512

Single-compartment cabinet
4 x glazed door
5 x adjustable shelf

Dimensions (mm)*		
W	D	H
800x580x2100mm		
900x580x2100mm		
1000x580x2100mm		

SLIDING-DOORS GLAZED CABINET

Cat. No. KL105 604

Double-compartment cabinet
4 x glazed sliding-door
5 x adjustable shelf

Dimensions (mm)*		
W	D	H
800x580x2100mm		
900x580x2100mm		
1000x580x2100mm		

DOUBLE-DOOR CABINET WITH 2 DRAWERS

Cat. No. KL105 404

2 x cargo drawer
2 x full door, lockable
1 x adjustable shelf

Dimensions (mm)*		
W	D	H
800x580x2100mm		
900x580x2100mm		
1000x580x2100mm		

DOUBLE-DOOR CABINET WITH 3 DRAWERS

Cat. No. KL105 405

3 x cargo drawer
2 x full door, lockable
3 x adjustable shelf

Dimensions (mm)*		
W	D	H
800x580x2100mm		
900x580x2100mm		
1000x580x2100mm		

*other dimensions available on request

Metal mediacal furniture made of powder-coated steel

WORKTABLE

Cat. No. KL101 101

The base is made of powder-coated steel profiles, equipped with feet for leveling. Table top made of acid resistant steel grade AISI 304, with noise-damping insulation and back protection.

Dimensions (mm)*		
W	D	H
600x600x900mm		
800x600x900mm		
900x600x900mm		

WORKTABLE

Cat. No. KL101 111

The base is made of powder-coated steel profiles, equipped with feet for leveling. Table top made of acid resistant steel grade AISI 304, with noise-damping insulation and back protection.

Dimensions (mm)*		
W	D	H
1400x600x900mm		
1600x600x900mm		
1800x600x900mm		

WORKTABLE

Cat. No. KL100 014

The base is made of powder-coated steel profiles, equipped with feet for leveling. Table top and shelf made of acid resistant steel grade AISI 304, with noise-damping insulation and back protection.

Dimensions (mm)*		
W	D	H
1400x600x900mm		
1500x600x900mm		
1600x600x900mm		

WORKTABLE

Cat. No. KL100 002

The base is made of powder-coated steel profiles, equipped with feet for leveling. Table top and shelf made of acid resistant steel grade AISI 304, with noise-damping insulation and back protection.

Dimensions (mm)*		
W	D	H
1400x600x900mm		
1600x600x900mm		
1800x600x900mm		

DRAINAGE WORKTABLE

Cat. No. KL101 104

The base is made of powder-coated steel profiles, equipped with feet for leveling. Drainage worktop made of acid resistant steel grade AISI 304, with noise-damping insulation and back protection.

Dimensions (mm)*		
W	D	H
600x600x900mm		
800x600x900mm		
900x600x900mm		

DRAINAGE WORKTABLE

Cat. No. KL101 113

The base is made of powder-coated steel profiles, equipped with feet for leveling. Drainage worktop made of acid resistant steel grade AISI 304, with noise-damping insulation and back protection.

Dimensions (mm)*		
W	D	H
1400x600x900mm		
1600x600x900mm		
1800x600x900mm		

WORKSTATION

Cat. No. KL101 102

Single-compartment open type cabinet made of powder-coated steel. Worktop made of stainless-steel grade AISI 304, with noise-damping insulation and back protection.

Dimensions (mm)*		
W	D	H
800x600x900mm		
1000x600x900mm		
1200x600x900mm		

WORKSTATION

Cat. No. KL101 112

Double-compartment open type cabinet made of powder-coated steel. Worktop made of stainless-steel grade AISI 304, with noise-damping insulation and back protection.

Dimensions (mm)*		
W	D	H
1400x600x900mm		
1600x600x900mm		
1800x600x900mm		

WORKTABLE

Cat. No. KL100 001

The base is made of powder-coated steel profiles, equipped with feet for leveling. Table top made of acid resistant steel grade AISI 304, with noise-damping insulation.

Dimensions (mm)*		
W	D	H
1400x600x900mm		
1600x600x900mm		
1800x600x900mm		

STANOWISKO ROBOCZE

Cat. No. KL101 103

Single-compartment open type cabinet with shelf made of powder-coated steel. Worktop made of stainless-steel grade AISI 304, with noise-damping insulation and back protection.

Dimensions (mm)*		
W	D	H
600x600x900mm		
800x600x900mm		
900x600x900mm		

WORKTABLE WITH CABINET

Cat. No. KL101 201

The base is made of powder-coated steel profiles, equipped with feet for leveling. Table top made of acid resistant steel grade AISI 304, with noise-damping insulation.
1 x single door cabinet with shelf, 400 mm wide

Dimensions (mm)*		
W	D	H
800x600x900mm		
1000x600x900mm		
1200x600x900mm		

WORKSTATION WITH CABINET

Cat. No. KL101 211

The base is made of powder-coated steel, equipped with feet for leveling. Table top made of acid resistant steel grade AISI 304, with noise-damping insulation.
1 x single door cabinet with shelf, 400 mm wide
1 x open cabinet

Dimensions (mm)*		
W	D	H
800x600x900mm		
1000x600x900mm		
1200x600x900mm		

WORKTABLE WITH CABINET AND DRAWER

Cat. No. KL101 202

The base is made of powder-coated steel profiles, equipped with feet for leveling. Table top made of acid resistant steel grade AISI 304, with noise-damping insulation.
1 x single door cabinet with shelf, 400 mm wide
1 x full extension drawer

Dimensions (mm)*		
W	D	H
800x600x900mm		
1000x600x900mm		
1200x600x900mm		

WORKTABLE WITH CABINET AND DRAWER

Cat. No. KL101 212

The base is made of powder-coated steel, equipped with feet for leveling. Table top made of acid resistant steel grade AISI 304, with noise-damping insulation.
1 x single door cabinet with shelf, 400 mm wide
1 x full extension drawer
1 x open cabinet

Dimensions (mm)*		
W	D	H
800x600x900mm		
1000x600x900mm		
1200x600x900mm		

WORKTABLE WITH DRAWERS

Cat. No. KL101 203

The base is made of powder-coated steel profiles, equipped with feet for leveling. Table top made of acid resistant steel grade AISI 304, with noise-damping insulation.
3 x full extension drawer

Dimensions (mm)*		
W	D	H
800x600x900mm		
1000x600x900mm		
1200x600x900mm		

*other dimensions available on request

WORKSTATION WITH DRAWERS

Cat. No. KL101 213

The base is made of powder-coated steel, equipped with feet for leveling. Table top made of acid resistant steel grade AISI 304, with noise-damping insulation.
3 x full extension drawer
1 x open cabinet

Dimensions (mm)*		
W	D	H
800x600x900mm		
1000x600x900mm		
1200x600x900mm		

WORKTABLE WITH DRAWERS

Cat. No. KL101 204

The base is made of powder-coated steel, equipped with feet for leveling. Table top made of acid resistant steel grade AISI 304, with noise-damping insulation.
4 x full extension drawer

Dimensions (mm)*		
W	D	H
800x600x900mm		
1000x600x900mm		
1200x600x900mm		

WORKSTATION WITH DRAWERS

Cat. No. KL101 214

The base is made of powder-coated steel, equipped with feet for leveling. Table top made of acid resistant steel grade AISI 304, with noise-damping insulation.
4 x full extension drawer
1 x open cabinet

Dimensions (mm)*		
W	D	H
800x600x900mm		
1000x600x900mm		
1200x600x900mm		

WORKTABLE WITH CABINET

Cat. No. KL101 301

The base is made of powder-coated steel, equipped with feet for leveling. Table top made of acid resistant steel grade AISI 304, with noise-damping insulation.
1 x double door cabinet with
1 shelf, 800 mm wide

Dimensions (mm)*		
W	D	H
1200x600x900mm		
1400x600x900mm		
1600x600x900mm		

WORKSTATION WITH CABINET

Cat. No. KL101 311

The base is made of powder-coated steel, equipped with feet for leveling. Table top made of acid resistant steel grade AISI 304, with noise-damping insulation.
1 x double door cabinet with
shelf, 800 mm wide
1 x open cabinet

Dimensions (mm)*		
W	D	H
1200x600x900mm		
1400x600x900mm		
1600x600x900mm		

WORKTABLE WITH CABINET AND DRAWERS

Cat. No. KL101 302

The base is made of powder-coated steel, equipped with feet for leveling. Table top made of acid resistant steel grade AISI 304, with noise-damping insulation.
1 x double door cabinet with shelf
3 x full extension drawer

Dimensions (mm)*		
W	D	H
1200x600x900mm		
1400x600x900mm		
1600x600x900mm		

WORKTABLE WITH CABINET AND DRAWERS

Cat. No. KL101 312

The base is made of powder-coated steel, equipped with feet for leveling. Table top made of acid resistant steel grade AISI 304, with noise-damping insulation.
1 x single door cabinet with shelf
3 x full extension drawer
1 x open cabinet

Dimensions (mm)*		
W	D	H
1200x600x900mm		
1400x600x900mm		
1600x600x900mm		

WORKTABLE WITH A LIT TABLETOP

Cat. No. KL100 010

Worktable with TRESPA type lit table top. In standard: white safety glass, two electrical sockets, light diffusing plate. Base frame is made of powder coated steel profiles, equipped with feet for leveling.

Dimensions (mm)*		
Szer.	Gł.	Wys.
1400x700x900mm		
1600x700x900mm		
1800x900x900mm		

WORKTABLE WITH A LIT TABLETOP

Cat. No. KL100 011

Worktable with TRESPA type lit table top. In standard: white safety glass, two electrical sockets, light diffusing plate. Base frame is made of powder coated steel profiles, equipped with a shelf placed on the plinth.

Dimensions (mm)*		
W	D	H
1400x700x900mm		
1600x700x900mm		
1800x900x900mm		

PLASTER PREPARATION WORKTABLE

Cat. No. KL102 001

The base is made of powder-coated steel profiles, equipped with feet for leveling. Table top made of acid resistant steel grade AISI 304, recessed, with noise-damping insulation and back protection.
1 x worktop with single-bowl sink with clarifier

Dimensions (mm)*		
W	D	H
1200x600x900mm		
1400x600x900mm		
1600x600x900mm		

STANOWISKO do opatrunków gipsowych

Cat. No. KL102 011

The base is made of powder-coated steel, equipped with feet for leveling. Table top made of acid resistant steel grade AISI 304, recessed, with noise-damping insulation and back protection.
1 x worktop with single-bowl
sink with clarifier
1 x open cabinet

Dimensions (mm)*		
W	D	H
1400x600x900mm		
1600x600x900mm		

PLASTER PREPARATION WORKSTATION

Cat. No. KL102 002

The base is made of powder-coated steel profiles, equipped with feet for leveling. Worktop made of acid resistant steel grade AISI 304, recessed, with noise-damping insulation and back protection.
1 x worktop with single-bowl sink
with clarifier
1 x double door cabinet
with shelf, 800 mm width

Dimensions (mm)*		
W	D	H
1400x600x900mm		
1600x600x900mm		

PLASTER PREPARATION WORKSTATION

Cat. No. KL102 003

The base is made of powder-coated steel profiles, equipped with feet for leveling. Worktop made of acid resistant steel grade AISI 304, recessed, with noise-damping insulation and back protection.
1 x worktop with single-bowl sink with clarifier
1 x single door cabinet with shelf
3 x full extension drawer

Dimensions (mm)*		
W	D	H
1400x600x900mm		
1600x600x900mm		

SINK WORKSTATION

Cat. No. KL103 000

Single-door cabinet made of powder-coated steel. Worktop with a sink made of stainless-steel grade AISI 304, recessed with noise-damping insulation, with back protection.

Dimensions (mm)*		
W	D	H
500x600x900mm		
600x600x900mm		

SINK WORKSTATION

Cat. No. KL103 012

The base is made of powder-coated steel profiles, equipped with feet for leveling. Worktop made of acid resistant steel grade AISI 304, recessed, with noise-damping insulation and back protection.
1 x single sink

Dimensions (mm)*		
W	D	H
800x600x900mm		
1000x600x900mm		
1200x600x900mm		

SINK WORKSTATION

Cat. No. KL103 010

The base is made of powder-coated steel profiles, equipped with feet for leveling. Worktop made of acid resistant steel grade AISI 304, recessed, with noise-damping insulation and back protection.
1 x single sink

Dimensions (mm)*		
W	D	H
800x600x900mm		
900x600x900mm		
1000x600x900mm		

*other dimensions available on request

SINK WORKSTATION

Cat. No. KL103 018

Single-compartment open type cabinet made of powdercoated steel. Worktop made of stainless-steel grade AISI 304, with noise-damping insulation and back protection.
1 x single sink

Dimensions (mm)*		
W	D	H
600x600x900mm		
800x600x900mm		
900x600x900mm		

SINK WORKSTATION
Cat. No. KL103 013

The base is made of powder-coated steel, equipped with feet for leveling. Table top made of acid resistant steel grade AISI 304, with noise-damping insulation.
1 x single door cabinet with shelf, 400 mm wide
1 x single sink

Dimensions (mm)*		
W	D	H
900x600x900mm		
1000x600x900mm		
1200x600x900mm		

SINK WORKSTATION
Cat. No. KL103 014

The base is made of powder-coated steel, equipped with feet for leveling. Table top made of acid resistant steel grade AISI 304, with noise-damping insulation.
1 x single door cabinet with shelf, 400 mm wide
1 x full extension drawer
1 x single sink

Dimensions (mm)*		
W	D	H
900x600x900mm		
1000x600x900mm		
1200x600x900mm		

SINK WORKSTATION
Cat. No. KL103 015

The base is made of powder-coated steel, equipped with feet for leveling. Table top made of acid resistant steel grade AISI 304, recessed with noise-damping insulation and back protection.
3 x full extension drawer
1 x single sink

Dimensions (mm)*		
W	D	H
900x600x900mm		
1000x600x900mm		
1200x600x900mm		

SINK WORKSTATION
Cat. No. KL103 011

The base is made of powder-coated steel profiles, equipped with feet for leveling. Worktop made of acid resistant steel grade AISI 304, recessed, with noise-damping insulation and back protection.
1 x double sink

Dimensions (mm)*		
W	D	H
900x600x900mm		
1000x600x900mm		
1200x600x900mm		

SINK WORKSTATION
Cat. No. KL103 003

Single-compartment cabinet. The base is made of powder-coated steel, equipped with feet for leveling. Table top made of acid resistant steel grade AISI 304, recessed with noise-damping insulation and back protection.
1 x full double sliding door

Dimensions (mm)*		
W	D	H
900x600x900mm		
1000x600x900mm		
1200x600x900mm		

SINK WORKSTATION
Cat. No. KL103 001

Single-compartment cabinet. The base is made of powder-coated steel, equipped with feet for leveling. Table top made of acid resistant steel grade AISI 304, recessed with noise-damping insulation and back protection.
1 x full double door
1 x single sink

Dimensions (mm)*		
W	D	H
800x600x900mm		
900x600x900mm		
1000x600x900mm		

SINK WORKSTATION
Cat. No. KL103 002

Single-compartment cabinet. The base is made of powder-coated steel, equipped with feet for leveling. Table top made of acid resistant steel grade AISI 304, recessed with noise-damping insulation and back protection.
1 x full double door

Wymiary (mm)*		
Szer.	Gł.	Wys.
800x600x900mm		
900x600x900mm		
1000x600x900mm		

SINK WORKSTATION
Cat. No. KL103 004

Single-compartment cabinet. The base is made of powder-coated steel, equipped with feet for leveling. Table top made of acid resistant steel grade AISI 304, recessed with noise-damping insulation and back protection.
1 x full double sliding door
2 x single sink

Wymiary (mm)*		
Szer.	Gł.	Wys.
800x600x900mm		
900x600x900mm		
1000x600x900mm		

SINK WORKSTATION

Cat. No. KL103 016

Single-compartment cabinet. The base is made of powder-coated steel, equipped with feet for leveling. Table top made of acid resistant steel grade AISI 304, recessed with noise-damping insulation and back protection.
1 x full double door
with shelf, 800 mm width
1 x single sink

Dimensions (mm)*		
W	D	H
1400x600x900mm		
1600x600x900mm		

SINK WORKSTATION

Cat. No. KL103 019

The base is made of powder-coated steel, equipped with feet for leveling. Table top made of acid resistant steel grade AISI 304, recessed with noise-damping insulation and back protection.
1 x full double door with shelf, 800 mm width
1 x open cabinet
1 x single sink

Dimensions (mm)*		
W	D	H
1400x600x900mm		
1600x600x900mm		

SINK WORKSTATION

Cat. No. KL103 017

The base is made of powder-coated steel, equipped with feet for leveling. Table top made of acid resistant steel grade AISI 304, recessed with noisedamping insulation and back protection.
1 x full door
3 x full extension drawer
1 x single sin

Dimensions (mm)*		
W	D	H
1400x600x900mm		
1600x600x900mm		

SINK WORKSTATION

Cat. No. KL103 020

The base is made of powder-coated steel, equipped with feet for leveling. Table top made of acid resistant steel grade AISI 304, recessed with noise-damping insulation and back protection.
1 x full door cabinet with shelf
3 x full extension drawer
1 x open cabinet
1 x single sink

Dimensions (mm)*		
W	D	H
1400x600x900mm		
1600x600x900mm		

duoLED 96
duoLED 96

KLAROMED

KLAROMED manufacturer

medical furniture catalogue KLAROLINE

Medical metal furniture

with body based on aluminium profile

Producent

KLAROMED

Technology and benefits:

- Fronts made of galvanised metal sheet powder-coated with paint enriched with silver ions - the natural antibacterial agent IGP-DURA®care.
- Cabinet and cupboard bodies are filled with two-sided laminated board of E1 hygiene class.
- The aluminium profile is a square shaped - so that cabinets are aligned.
- Fronts are made in double-walled system with moisture resistant, stiffening and noise-damping insulation.
- Fronts with silicone seals equipped with "C" shaped handles. Under the handles oval embossing - making it easier to grab.
- Glazed door equipped with safety glass.
- Cabinets have four-sided, permanently integrated metal plinths, with leveling capabilities.
- Cabinets and wall cabinets equipped with a top plinth.
- The inside walls of cabinets equipped with rasters that allow adjustment of shelf height every 25 mm.
- Drawers mounted on roller slides with full extension and self-closing mechanism.
- Hinges that allow the door to open 160°
- Worktops made of composite mineral conglomerate or HPL with wall boards.
- After the assembly, the furniture is tightly siliconed - the construction is one surface, easy to clean and disinfect.
- A variety of cabinet configurations and a wide range of accessories (shelves, baskets, drawers, trays in sizes according to DIN or ISO standards) make it possible to adapt the construction to specific tasks and customer needs.

SINGLE-DOOR HANGING CABINETRY

Cat.No. KL304 203

Single-compartment wall cabinetry
1x full door
2 x adjustable shelf

Dimensions (mm)*		
W	D	H
400x300x720mm		
500x300x720mm		
600x300x720mm		

SINGLE-DOOR GLAZED HANGING CABINETRY

Cat.No. KL304 103

Single-compartment wall cabinetry
1x glazed door
2 x adjustable shelf

Dimensions (mm)*		
W	D	H
400x300x720mm		
500x300x720mm		
600x300x720mm		

DOUBLE-DOOR HANGING CABINETRY

Cat.No. KL304 202

Single-compartment wall cabinetry
2 x full door
2 x adjustable shelf

Dimensions (mm)*		
W	D	H
800x300x720mm		
900x300x720mm		
1000x300x720mm		

SINGLE-DOOR GLAZED HANGING CABINETRY

Cat.No. KL304 102

Single-compartment wall cabinetry
2 x glazed door
2 x adjustable shel

Dimensions (mm)*		
W	D	H
800x300x720mm		
900x300x720mm		
1000x300x720mm		

THREE-DOOR HANGING CABINETRY

Cat.No. KL304 204

Double-compartment wall cabinetry
3 x full door
4 x adjustable shelf

Dimensions (mm)*		
W	D	H
1200x300x720mm		
1500x300x720mm		
1800x300x720mm		

THREE-DOOR GLAZED HANGING CABINETRY

Cat.No. KL304 104

Double-compartment wall cabinetry
3 x glazed door
4 x adjustable shelf

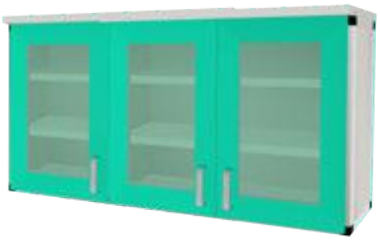

Dimensions (mm)*		
W	D	H
1200x300x720mm		
1500x300x720mm		
1800x300x720mm		

OPEN TYPE CABINET

Cat.No. KL303 107

Single-compartment cabinet
1 x adjustable shelf
Laminate worktop.

Dimensions (mm)*		
W	D	H
400x600x900mm		
500x600x900mm		
600x600x900mm		

SINGLE-DOOR CABINET

Cat.No. KL303 101

Szafka stojąca jednokomorowa
1 x drzwi pełne
1 x przestawna półka
Blat laminowany.

Dimensions (mm)*		
W	D	H
400x600x900mm		
500x600x900mm		
600x600x900mm		

SINGLE-DOOR CABINET WITH DRAWER

Cat.No. KL303 102

Double-compartment cabinet
1 x full-extension drawer
1 x full door
1 x adjustable shelf
Laminate workto

Dimensions (mm)*		
W	D	H
400x600x900mm		
500x600x900mm		
600x600x900mm		

THREE DRAWERS CABINET

Cat.No. KL303 103

Single-compartment cabinet
3 x full-extension drawer
Laminate worktop

Dimensions (mm)*		
W	D	HY
400x600x900mm		
500x600x900mm		
600x600x900mm		

FOUR DRAWERS CABINET

Cat.No. KL303 104

Single-compartment cabinet
4 x full-extension drawer
Laminate worktop.

Dimensions (mm)*		
W	D	H
400x600x900mm		
500x600x900mm		
600x600x900mm		

FIVE DRAWERS CABINET

Cat.No. KL303 105

Single-compartment cabinet
5 x full-extension drawer
Laminate worktop.

Dimensions (mm)*		
W	D	H
400x600x900mm		
500x600x900mm		
600x600x900mm		

SIX DRAWERS CABINET

Cat.No. KL303 106

Single-compartment cabinet
6 x full-extension drawer
Laminate worktop.

Dimensions (mm)*		
W	D	H
400x600x900mm		
500x600x900mm		
600x600x900mm		

SINK WORKSTATION

Cat.No. KL303 110

Single-compartment cabinet
1 x full door
1 x one-bowl sink
Laminate worktop.

Dimensions (mm)*		
W	Gł.	H
400x600x900mm		
500x600x900mm		
600x600x900mm		

CORNER CABINET

Cat.No. KL303 108

Single-compartment corner cabinet
1 x full door
1 x adjustable shelf
Laminate worktop

Dimensions (mm)*		
W	D	H
1100/1100x600x900		

* other dimensions available on request

SINGLE-DOOR CABINET WITH BASKETS

Cat.No. KL303 622

Single-compartment cabinet
1 x full door
Laminate worktop
1 x basket KLDIN01, dim. 538x500x100mm
2 x basket KLDIN02, dim. 538x500x180mm

Dimensions (mm)*		
W	D	H
650x600x900mm		

DOUBLE-DOOR CABINET
Cat.No. KL303 201

Single-compartment cabinet
2 x full door
1 x adjustable shelf
Laminate worktop.

Dimensions (mm)*		
W	D	H
800x600x900mm		
900x600x900mm		
1000x600x900mm		

DOUBLE-DOOR CABINET WITH ONE DRAWER
Cat.No. KL303 213

Double-compartment cabinet
1 x full-extension drawer
2 x full door
1 x adjustable shelf
Laminate worktop.

Dimensions (mm)*		
W	D	H
800x600x900mm		
900x600x900mm		
1000x600x900mm		

SINGLE-DOOR CABINET WITH FOUR DRAWERS
Cat.No. KL303 204

Double-compartment cabinet
4 x full-extension drawer
1 x full door
1 x adjustable shelf
Laminate worktop.

Dimensions (mm)*		
W	D	H
800x600x900mm		
900x600x900mm		
1000x600x900mm		

OPEN TYPE CABINET
Cat.No. KL303 211

Double-compartment cabinet
2 x adjustable shelf
Laminate worktop..

Dimensions (mm)*		
W	D	H
800x600x900mm		
900x600x900mm		
1000x600x900mm		

SINGLE-DOOR CABINET WITH SIX DRAWERS
Cat.No. KL303 206

Szafka stojąca dwukomorowa
1 x drzwi pełne
1 x przestawna półka
6 x szuflada o pełnym wysuwie
Blat laminowany.

Dimensions (mm)*		
W	D	H
800x600x900mm		
900x600x900mm		
1000x600x900mm		

SINGLE-DOOR CABINET WITH FIVE DRAWERS
Cat.No. KL303 205

Double-compartment cabinet
5 x full-extension drawer
1 x full door
1 x adjustable shelf
Laminate worktop.

Dimensions (mm)*		
W	D	H
800x600x900mm		
900x600x900mm		
1000x600x900mm		

DOUBLE-DOOR CABINET WITH TWO DRAWERS
Cat.No. KL303 202

Double-compartment cabinet
2 x full-extension drawer
2 x full door
1 x adjustable shelf
Laminate worktop.

Dimensions (mm)*		
W	D	H
800x600x900mm		
900x600x900mm		
1000x600x900mm		

SINGLE-DOOR CABINET WITH THREE DRAWERS
Cat.No. KL303 203

Double-compartment cabinet
3 x full-extension drawer
1 x full door
1 x adjustable shelf
Laminate worktop.

Dimensions (mm)*		
W	D	H
800x600x900mm		
900x600x900mm		
1000x600x900mm		

TEN DRAWERS CABINET
Cat.No. KL303 209

Double-compartment cabinet
10 x full-extension drawer
Laminate worktop.

Dimensions (mm)*		
W	D	H
800x600x900mm		
900x600x900mm		
1000x600x900mm		

SINGLE-DOOR CABINET WITH FOUR DRAWERS
Cat.No. KL303 218

Double-compartment cabinet
4 x full-extension drawer
1 x full door
1 x adjustable shelf
Laminate worktop

Dimensions (mm)*		
W	D	H
800x600x900mm		
900x600x900mm		
1000x600x900mm		

DOUBLE-DOOR CABINET WITH BASKETS
Cat.No. KL303 941

Single-compartment cabinet
2 x full door
Laminate worktop
5 x basket KLDIN03 ,
dim. 835x500x100mm

Dimensions (mm)*		
W	D	H
990x600x900mm		

DOUBLE-DOOR CABINET WITH BASKETS
Cat.No. KL303 952

Double-compartment cabinet
2 x full door
Laminate worktop
5 x basket KLDIN01,
dim. 538x500x100mm
5 x basket KLDIN04,
dim. 268x500x100mm

Dimensions (mm)*		
W	D	H
1003x600x900mm		

SINK WORKSTATION
Cat.No. KL303 217

Single-compartment cabinet
2 x full door
1 x two-bowl sink

Dimensions (mm)*		
W	D	H
800x600x900mm		
900x600x900mm		
1000x600x900mm		

SINK WORKSTATION
Cat.No. KL303 216

Single-compartment cabinet
2 x full door
1 x one bowl sink

Dimensions (mm)*		
W	D	H
800x600x900mm		
900x600x900mm		
1000x600x900mm		

THREE-COMPARTMENT CABINET
Cat.No. KL303 407

9 x full-extension drawer
Laminate worktop.

Dimensions (mm)*		
W	D	H
1200x600x900mm		
1500x600x900mm		

* dostępne inne wymiary na zamówienie

THREE-COMPARTMENT CABINET
Cat.No.KL303 501

4 x full door
3 x adjustable shelf
Laminate worktop.

Dimensions (mm)*		
W	D	H
1600x600x900mm		
2000x600x900mm		
2400x600x900mm		

THREE-COMPARTMENT CABINET
Cat.No. KL303 504

Three-compartment cabinet
6 x full-extension drawer
2 x full door
1 x adjustable shelf
Laminate worktop.

Dimensions (mm)*		
W	D	H
1600x600x900mm		
2000x600x900mm		
2400x600x900mm		

THREE-COMPARTMENT CABINET
Cat.No. KL303 502

Three-compartment cabinet
12 x full-extension drawer
2 x full door
1 x adjustable shelf
Laminate worktop.

Dimensions (mm)*		
W	D	H
1600x600x900mm		
2000x600x900mm		
2400x600x900mm		

TWO-COMPARTMENT CABINET
Cat.No. KL303 301

Two-compartment cabinet
3 x full door
2 x adjustable shelf
Laminate worktop

Dimensions (mm)*		
W	D	H
1200x600x900mm		
1500x600x900mm		

TWO-COMPARTMENT CABINET
Cat.No. KL303 302

Two-compartment cabinet
2 x full door
1 x adjustable shelf
3 x full-extension drawer
Laminate worktop.

Dimensions (mm)*		
W	D	H
1200x600x900mm		
1500x600x900mm		

THREE-COMPARTMENT CABINET
Cat.No. KL303 406

Three-compartment cabinet
9 x full-extension drawer
1 x full door
1 x adjustable shelf
Laminate worktop.

Dimensions (mm)*		
W	D	H
1200x600x900mm		
1500x600x900mm		

THREE-COMPARTMENT CABINET
Cat.No. KL303 402

Three-compartment cabinet
3 x full-extension drawer
2 x full door
2 x adjustable shelf
Laminate worktop.

Dimensions (mm)*		
W	D	H
1200x600x900mm		
1500x600x900mm		

SINGLE-DOOR CABINET
Cat.No. KL305 101

Single-compartment cabinet
1 x full door, lockable
5 x adjustable shelf

Dimensions (mm)*		
W	D	H
400x580x2100mm		
500x580x2100mm		
600x580x2100mm		

WARDROBE
Cat.No. KL305 102

Single-compartment cabinet
1 x full door, lockable
2 x adjustable shelf
1 x hanger

Dimensions (mm)*		
W	D	H
400x580x2100mm		
500x580x2100mm		
600x580x2100mm		

SINGLE-DOOR GLAZED CABINET
Cat.No. KL305 103

Single-compartment cabinet
1 x glazed door, lockable
5 x adjustable shelf

Dimensions (mm)*		
W	D	H
400x580x2100mm		
500x580x2100mm		
600x580x2100mm		

OPEN CABINET
Cat.No. KL305 104

Single-compartment cabinet
5 x adjustable shelf

Dimensions (mm)*		
W	D	H
400x580x2100mm		
500x580x2100mm		
600x580x2100mm		

DOUBLE-DOOR CABINET
Cat.No. KL305 202

Double-compartment cabinet
2 x full door, lockable
4 x adjustable shelf

Dimensions (mm)*		
W	D	H
400x580x2100mm		
500x580x2100mm		
600x580x2100mm		

DOUBLE-DOOR GLAZED CABINET
Cat.No. KL305 201

Double-compartment cabinet
1 x glazed door, lockable
1 x full door, lockable
4 x adjustable shelf

Dimensions (mm)*		
W	D	H
400x580x2100mm		
500x580x2100mm		
600x580x2100mm		

DOUBLE-DOOR GLAZED CABINET
Cat.No.KL305 203

Double-compartment cabinet
2 x glazed door, lockable
4 x adjustable shelf

Dimensions (mm)*		
W	D	H
400x580x2100mm		
500x580x2100mm		
600x580x2100mm		

SINGLE-DOOR CABINETWITH DRAWERS
Cat.No. KL305 204

Double-compartment cabinet
1 x glazed door, lockable
3 x adjustable shelf
3 x full-extension drawer

Dimensions (mm)*		
W	D	H
400x580x2100mm		
500x580x2100mm		
600x580x2100mm		

ENDOSCOPE GLAZED CABINET
Cat.No. KL305 107

Single-compartment high cabinet
1 x glazed door, lockable
2 x retractable hanger for endoscope
1 x drip tray
1 x container for endoscope accessories

Dimensions (mm)*		
W	D	H
500x580x2100mm		
600x580x2100mm		

* other dimensions available on request

CATHETER CABINET
Cat.No. KL305 106

Single-compartment high cabinet
1 x full door, lockable
3 x retractable hanger for catheters
2 x adjustable shelf

Dimensions (mm)*		
W	D	H
500x580x2100mm		
600x580x2100mm		

SINGLE-DOOR CABINET WITH SAFE

Cat.No. KL305 105

Single-compartment cabinet
1 x full door, lockable
3 x adjustable shelf
1 x safe

Dimensions (mm)*		
W	D	H
400x580x2100mm		
500x580x2100mm		
600x580x2100mm		

SINGLE-DOOR CABINET WITH DRAWERS

Cat.No. KL305 205

Double-compartment cabinet
1 x glazed door, lockable
3 x adjustable shelf
5 x full-extension drawer

Dimensions (mm)*		
W	D	H
400x580x2100mm		
500x580x2100mm		
600x580x2100mm		

SINGLE-DOOR CABINET WITH BASKETS

Cat.No. KL306 612

Single-compartment cabinet
1 x full door, lockable
Guides made of ABS plastic
6 x basket KLDIN01, dim. 538x500x100mm
4 x basket KLDIN02, dim. 538x500x180mm

Dimensions (mm)*		
W	D	H
650x580x2100mm		

SINGLE-DOOR CABINET WITH BASKETS

Cat.No. KL306 611

Single-compartment cabinet
1 x full door, lockable
Guides made of ABS plastic
14 x basket KLDIN01, dim. 538x500x100mm

Dimensions (mm)*		
W	D	H
650x580x2100mm		

SINGLE-DOOR GLAZED CABINET WITH BASKETS

Cat.No. KL306 616

Single-compartment cabinet
1 x glazed door, lockable
Guides made of ABS plastic
14 x basket KLDIN01, dim. 538x500x100mm

Dimensions (mm)*		
W	D	H
650x580x2100mm		

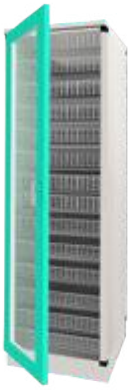

SINGLE-DOOR GLAZED CABINET WITH BASKETS

Cat.No. KL306 617

Single-compartment cabinet
1 x glazed door, lockable
Guides made of ABS plastic
6 x basket KLDIN01, dim. 538x500x100mm
4 x basket KLDIN02, dim. 538x500x180mm

Dimensions (mm)*		
W	D	H
650x580x2100mm		

SINGLE-DOOR CABINET WITH BASKETS AND SAFE

Cat.No. KL306 614

Single-compartment cabinet
1 x full door, lockable
Guides made of ABS plastic
7 x basket KLDIN01, dim. 538x500x100mm
2 x basket KLDIN02, dim. 538x500x180mm
1 x safe

Dimensions (mm)*		
W	D	H
650x580x2100mm		

SINGLE-DOOR GLAZED CABINET FOR CATHETERS

Cat.No. KL306 619

Single-compartment cabinet
1 x glazed door
3 x retractable hanger for catheters
2 x adjustable shelf
Guides made of ABS plastic
2 x KLDIN01 basket, dim. 538x500x100mm

Dimensions (mm)*		
W	D	H
650x580x2100mm		

OPEN TYPE CABINET
Cat.No. KL305 303

Single-compartment cabinet
5 x adjustable shelf

Dimensions (mm)*		
W	D	H
800x580x2100mm		
900x580x2100mm		
1000x580x2100mm		

DOUBLE-DOOR CABINET
Cat.No. KL305 301

Single-compartment cabinet
2 x full door, lockable
5 x adjustable shelf

Dimensions (mm)*		
W	D	H
800x580x2100mm		
900x580x2100mm		
1000x580x2100mm		

DOUBLE-DOOR GLAZED CABINET
Cat.No. KL305 302

Single-compartment cabinet
2 x glazed door, lockable
5 x adjustable shelf

Dimensions (mm)*		
W	D	H
800x580x2100mm		
900x580x2100mm		
1000x580x2100mm		

FOUR-DOORS CABINET
Cat.No. KL305 401

Double-compartment cabinet
4 x full door, lockable
4 x adjustable shelf

Dimensions (mm)*		
W	D	H
800x580x2100mm		
900x580x2100mm		
1000x580x2100mm		

ENDOSCOPE GLAZED CABINET
Cat.No. KL305 304

Single-compartment high cabinet
1 x glazed door, lockable
2 x retractable hanger for endoscope
1 x drip tray
1 x container for endoscope accessories

Dimensions (mm)*		
W	D	H
1000x580x2100mm		
1100x580x2100mm		
1200x580x2100mm		

FOUR-DOORS GLAZED CABINET
Cat.No. KL305 402

Double-compartment cabinet
2 x full door, lockable
2 x glazed door, lockable
4 x adjustable shelf

Dimensions (mm)*		
W	D	H
800x580x2100mm		
900x580x2100mm		
1000x580x2100mm		

FOUR-DOORS GLAZED CABINET
Cat.No. KL305 403

Double-compartment cabinet
4 x glazed door, lockable
4 x adjustable shelf

Dimensions (mm)*		
W	D	H
800x580x2100mm		
900x580x2100mm		
1000x580x2100mm		

* other dimensions available on request

DOUBLE-DOOR CABINET WITH BASKETS
Cat.No. KL306 911

Szafa jednokomorowa
2 x drzwi pełne, zamykane na klucz
Prowadnice ścienne z tworzywa ABS
14 x kosz KLDIN03, wym 835x500x100mm

Dimensions (mm)*		
W	D	H
990x580x2100mm		

DOUBLE-DOOR GLAZED CABINET WITH BASKETS

Cat.No. KL306 912

Single-compartment cabinet
2 x glazed door, lockable
14 x KLDIN03 basket,
dim. 835x500x100mm

Dimensions (mm)*		
W	D	H
990x580x2100mm		

FOUR-DOOR CABINET WITH BASKETS

Cat.No. KL306 921

Three-compartment high cabinet
4 x full door, lockable
6 x KLDIN03 basket, dim. 835x500x100mm
8 x KLDIN01 basket, dim. 538x500x100mm
8 x KLDIN04 basket, dim. 258x500x100mm

Dimensions (mm)*		
W	D	H
1003x580x2100mm		

DESK TOP UNIT

Cat.No. KL30

Desk top unit for a medical-computer desk or counter.
Production to individual order.

FOUR-DOOR GLAZED CABINET WITH BASKETS

Cat.No. KL306 922

Three-compartment high cabinet
2 x full door, lockable
2 x glazed door, lockable
6 x KLDIN03 basket, dim. 835x500x100mm
4 x KLDIN02 basket, dim. 538x500x180mm
4 x KLDIN05 basket, dim. 268x500x180mm

Dimensions (mm)*		
W	D	H
1003x580x2100mm		

OFFICE DESK

Cat.No. KL303 611

Medical desk
Open space for a computer
Shelf width 250 mm
Slide out shelf for keyboard
Worktop of laminated board

Dimensions (mm)*		
W	D	H
1000x600x750mm		

OPEN-TYPE MEDICAL COUNTER

Cat.No. KL301 101

Open-type counter
Worktop of laminated board

Dimensions (mm)*		
W	D	H
600x600x900mm		

OFFICE DESK

Cat.No. KL303 601

Medical desk
Worktop of laminated board

Dimensions (mm)*		
W	D	H
1400x600x750mm		

OPEN-TYPE MEDICAL COUNTER

Cat.No. KL301 102

Open-type counter
Worktop of laminated board

Dimensions (mm)*		
W	D	H
1100x600x900mm		

OFFICE DESK
Cat.No. KL303 602

Medical desk
1 x door
1x adjustable shelf
1 x full-extension drawer, width 400 mm
Worktop of laminated board

Dimensions (mm)*		
W	D	H
1200x600x750mm		

OFFICE DESK
Cat.No. KL303 603

Medical desk
3 x full-extension drawer, width 400 mm
Worktop of laminated board

Dimensions (mm)*		
W	D	H
1200x600x750mm		

OFFICE DESK
Cat.No. KL303 605

Medical desk with 2 cabinets
cabinet 1: 1 x full door width 400 mm, 1 x adjustable shelf,
1 x full-extension drawer
cabinet 2: 4 x full-extension
drawer, width 400 mm
Worktop of laminated board

Dimensions (mm)*		
W	D	H
1600x600x750mm		

OFFICE DESK
Cat.No. KL303 613

Medical desk
Open space for a computer
Shelf width 250 mm
Slide out shelf for keyboard
4 x full-extension
drawer, width 400 mm
Worktop of laminated board

Dimensions (mm)*		
W	D	H
1400x600x750mm		

* other dimensions available on request

OPEN-TYPE MEDICAL COUNTER
Cat.No. KL301 103

Open-type counter
Worktop of laminated board

Dimensions (mm)*		
W	D	H
1600x600x900mm		

OPEN-TYPE MEDICAL COUNTER
Cat.No. KL301 104

Open-type counter
Worktop of laminated board

Dimensions (mm)*		
W	D	H
2100x600x900mm		

OFFICE DESK
Cat.No. KL303 612

Medical desk
cabinet: 1 x full door width 400 mm, 1 x adjustable shelf,
1 x full-extension drawer
Open space for a computer
Shelf width 250 mm
Slide out shelf for keyboard
Worktop of laminated board

Dimensions (mm)*		
W	D	H
1400x600x750mm		

MOBILE UNDER DESK CONTAINER
Cat. No. KL302 101 low
Cat. No. KL302 201 high

1 x full door
1 x adjustable shelf

Dimensions (mm)*		
W	D	H
460x550x650mm		
510x550x840mm		

MOBILE UNDER DESK CONTAINER
Cat. No. KL302 102

1 x full-extension drawer
1 x full door
1 x adjustable shelf

Dimensions (mm)*		
W	D	H
450x550x650mm		

MOBILE UNDER COUNTER CONTAIN
Cat. No. KL302 202

1 x full-extension drawer
1 x full door
1 x adjustable shelf

Dimensions (mm)*		
W	D	H
450x550x840mm		

MOBILE UNDER DESK CONTAINER
Cat.No. KL302 103

3 x full-extension drawer

Dimensions (mm)*		
W	D	H
450x550x650mm		

MOBILE UNDER COUNTER CONTAINER
Cat.No. KL302 203

3 x full-extension drawer

Dimensions (mm)*		
W	D	H
450x550x840mm		

MOBILE UNDER DESK CONTAINER
Cat.No. KL302 108

4 x full-extension drawer

Dimensions (mm)*		
W	D	H
450x550x650mm		

MOBILE UNDER COUNTER CONTAINER
Cat.No. KL302 204

4 x full-extension drawer

Dimensions (mm)*		
W	D	H
450x550x840mm		

MOBILE UNDER DESK CONTAINER
Cat.No. KL302 106

2 x full-extension drawer

Dimensions (mm)*		
W	D	H
450x550x650mm		

INFANT CARE STATION

Cat.No. KL300 001

1 x CORIAN type worktop
4 x full-extension drawer
1 x mattress for baby changing

Dimensions (mm)*		
W	D	Wys.
770x750x900mm		

INFANT CARE & BATH STATION

Cat.No. KL300 006

1 x CORIAN type worktop
1 x bath
1 x mattress for baby changing
1 x basket KLDIN01, dim. 538x500x100 mm
2 x basket KLDIN02, dim. 538x500x180 mm
3 x full door
4 x full-extension drawer

Dimensions (mm)*		
W	D	H
1900x600x900mm		

INFANT CARE & BATH STATION

Cat.No. KL300 005

1 x bath
1 x CORIAN type worktop
2 x full door
4 x full-extension drawer
1 x mattress for baby changing

Dimensions (mm)*		
W	D	H
1650x750/600x900mm		

INFANT CARE & BATH STATION

Cat.No. KL300 004

1 x CORIAN type worktop
1 x bath
1 x mattress for baby changing
1 x open-type cabinet
4 x full-extension drawer

Dimensions (mm)*		
W	D	H
1650x750/600x900mm		

INFANT BATH STATION

Cat.No. KL300 003

1 x CORIAN type worktop
1 x bath
2 x full door

Dimensions (mm)*		
W	D	H
900x600x900mm		

* other dimensions available on request

KLAROMED

KLAROMED manufacturer

medical furniture catalogue KLAROLINE

Medical metal furniture
with ECO body

Manufacturer

KLAROMED

Technology and benefits:

- Fronts, plinths and top plinths made of galvanised metal sheet powder-coated with paint enriched with silver ions - the natural antibacterial agent IGP-DURA®care.
- Cabinet and cupboard bodies are filled with two-sided laminated board of E1 hygiene class.
- Fronts are made in double-walled system with moisture resistant, stiffening and noise-damping insulation.
- Fronts with silicone seals equipped with "C" shaped handles. Under the handles oval embossing - making it easier to grab.
- Glazed door equipped with safety glass.
- Cabinets have four-sided, permanently integrated metal plintsh, with leveling capabilities.
- Cabinets and wall cabinets equipped with a top plinth.
- The inside walls of cabinets equipped with rasters that allow adjustment of shelf height every 25 mm.
- Drawers mounted on roller slides with full extension and self-closing mechanism.
- Hinges that allow the door to open 160°.
- Worktops made of composite mineral conglomerate or HPL with wall boards.
- After the assembly, the furniture is tightly siliconed - the construction is one surface, easy to clean and disinfect.
- A variety of cabinet configurations and a wide range of accessories (shelves, baskets, drawers, trays in sizes according to DIN or ISO standards) make it possible to adapt the construction to specific tasks and customer needs.

SINGLE-DOOR HANGING CABINETRY
Cat. No. KL404 203

Single-compartment wall cabinetry 1x full door
2 x adjustable shelf

Dimensions (mm)*		
W	D	H
400x300x720mm		
500x300x720mm		
600x300x720mm		

SINGLE-DOOR GLAZED HANGING CABINETRY
Cat. No. KL404 103

Single-compartment wall cabinetry
1x glazed door
2 x adjustable shelf

Dimensions (mm)*		
W	D	H
400x300x720mm		
500x300x720mm		
600x300x720mm		

DOUBLE-DOOR HANGING CABINETRY
Cat. No. KL404 202

Single-compartment wall cabinetry
2 x full door
2 x adjustable shelf

Dimensions (mm)*		
W	D	H
800x300x720mm		
900x300x720mm		
1000x300x720mm		

DOUBLE-DOOR GLAZED HANGING CABINETRY
Cat. No. KL404 102

Szafka wisząca jednokomorowa
2 x drzwi przeszklone
2 x przestawna półka

Dimensions (mm)*		
W	D	H
800x300x720mm		
900x300x720mm		
1000x300x720mm		

THREE-DOOR HANGING CABINETRY
Cat. No. KL404 204

Double-compartment wall cabinetry
3 x full door
4 x adjustable shelf

Dimensions (mm)*		
W	D	H
1200x300x720mm		
1500x300x720mm		
1800x300x720mm		

THREE-DOOR GLAZED HANGING CABINETRY
Cat. No. KL404 104

Double-compartment wall cabinetry
3 x glazed door
4 x adjustable shelf

Dimensions (mm)*		
W	D	H
1200x300x720mm		
1500x300x720mm		
1800x300x720mm		

OPEN TYPE CABINET
Cat. No. KL403 107

Single-compartment cabinet
1 x adjustable shelf
Laminate worktop

Dimensions (mm)*		
W	D	H
400x600x900mm		
500x600x900mm		
600x600x900mm		

SINGLE-DOOR CABINET
Cat. No. KL403 101

Single-compartment cabinet
1 x full door
1 x adjustable shelf
Laminate worktop

Dimensions (mm)*		
W	D	H
400x600x900mm		
500x600x900mm		
600x600x900mm		

SINGLE-DOOR CABINET WITH DRAWER
Cat. No. KL403 102

Double-compartment cabinet
1 x full-extension drawer
1 x full door
1 x adjustable shelf
Laminate worktop

Dimensions (mm)*		
W	D	H
400x600x900mm		
500x600x900mm		
600x600x900mm		

THREE DRAWERS CABINET
Cat. No. KL403 103

Single-compartment cabinet
3 x full-extension drawer
Laminate worktop

Dimensions (mm)*		
W	D	H
400x600x900mm		
500x600x900mm		
600x600x900mm		

FOUR DRAWERS CABINET
Cat. No. KL403 104

Single-compartment cabinet
4 x full-extension drawer
Laminate worktop

Dimensions (mm)*		
W	D	Wys.
400x600x900mm		
500x600x900mm		
600x600x900mm		

FIVE DRAWERS CABINET
Cat. No. KL403 105

Single-compartment cabinet
5 x full-extension drawer
Laminate worktop

Dimensions (mm)*		
w	d	h
400x600x900mm		
500x600x900mm		
600x600x900mm		

SIX DRAWERS CABINET
Cat. No. KL403 106

Single-compartment cabinet
6 x full-extension drawer
Laminate worktop

Wymiary (mm)*		
W	D	H
400x600x900mm		
500x600x900mm		
600x600x900mm		

SINK WORKSTATION
Cat. No. KL403 110

Single-compartment cabinet
1 x full door
1 x one-bowl sink
Laminate worktop

Wymiary (mm)*		
W	D	H
400x600x900mm		
500x600x900mm		
600x600x900mm		

SINGLE-DOOR CABINET WITH BASKETS
Cat. No. KL403 622

Single-compartment cabinet
1 x full door
Laminate worktop
1 x basket KLDIN01, dim. 538x500x100mm
2 x basket KLDIN02, dim. 538x500x180mm

Dimensions (mm)		
W	D	H
650x600x900mm		

*dostępne inne wymiary na zamówienie

SINGLE-DOOR CABINET WITH BASKETS
Cat. No. KL403 621

Single-compartment cabinet
1 x full door
Laminate worktop
5 x basket KLDIN01, dim. 538x500x100mm

Dimensions (mm)		
W	D	H
650x600x900mm		

DOUBLE-DOOR CABINET
Cat. No. KL403 201

Single-compartment cabinet
2 x full door
1 x adjustable shelf
Laminate worktop

Dimensions (mm)*		
W	D	H
800x600x900mm		
900x600x900mm		
1000x600x900mm		

DOUBLE-DOORCABINETWITHONE DRAWER
Cat. No. KL403 213

Szafka stojąca jednokomorowa
2 x drzwi pełne
1 x przestawna półka
1 x szuflada o pełnym wysuwie
Blat laminowany

Dimensions (mm)*		
W	D	H
800x600x900mm		
900x600x900mm		
1000x600x900mm		

CORNER CABINET
Cat. No. KL403 108

Single-compartment corner
cabinet 1 x full door
1 x adjustable shelf
Laminate worktop

Dimensions (mm)*		
W	D	H
1100/1100x600x900mm		

DOUBLE-DOOR CABINET WITH TWO DRAWERS
Cat. No. KL403 202

Double-compartment cabinet
2 x full-extension drawer
2 x full door
1 x adjustable shelf
Laminate worktop

Dimensions (mm)*		
W	D	H
800x600x900mm		
900x600x900mm		
1000x600x900mm		

SINGLE-DOOR CABINET WITH FOUR DRAWERS
Cat. No. KL403 207

Double-compartment cabinet
4 x full-extension drawer
1 x full door
1 x adjustable shelf
Laminate worktop

Dimensions (mm)*		
W	D	H
800x600x900mm		
900x600x900mm		
1000x600x900mm		

SINGLE-DOOR CABINET WITH THREEDRAWERS
Cat. No. KL403 203

Double-compartment cabinet
3 x full-extension drawer
1 x full door
1 x adjustable shelf
Laminate worktop

Dimensions (mm)*		
W	D	H
800x600x900mm		
900x600x900mm		
1000x600x900mm		

SINGLE-DOOR CABINET WITH FOUR DRAWERS
Cat. No. KL403 204

Double-compartment cabinet
4 x full-extension drawer
1 x full door
1 x adjustable shelf
Laminate worktop

Dimensions (mm)*		
W	D	H
800x600x900mm		
900x600x900mm		
1000x600x900mm		

SINGLE-DOOR CABINET WITH FIVE DRAWERS
Cat. No. KL403 205

Double-compartment cabinet
5 x full-extension drawer
1 x full door
1 x adjustable shelf
Laminate worktop

Dimensions (mm)*		
W	D	H
800x600x900mm		
900x600x900mm		
1000x600x900mm		

SINGLE-DOOR CABINET WITH SIX DRAWERS

Cat. No. KL403 206

Double-compartment cabinet
6 x full-extension drawer
1 x full door
1 x adjustable shelf
Laminate worktop

Dimensions (mm)*		
W	D	H
800x600x900mm		
900x600x900mm		
1000x600x900mm		

TWELVE DRAWERS CABINET

Cat. No. KL403 210

Double-compartment cabinet
12 x full-extension drawer
Laminate worktop

Dimensions (mm)*		
W	D	H
800x600x900mm		
900x600x900mm		
1000x600x900mm		

SINK WORKSTATION

Cat. No. KL403 216

Single-compartment cabinet
2 x full door
1 x one bowl sink

Dimensions (mm)*		
W	D	H
800x600x900mm		
900x600x900mm		
1000x600x900mm		

SINK WORKSTATION

Cat. No. KL403 217

Single-compartment cabinet
2 x full door
1 x two-bowl sink

Dimensions (mm)*		
W	D	H
800x600x900mm		
900x600x900mm		
1000x600x900mm		

DOUBLE-DOOR CABINET WITH BASKETS

Cat. No. KL403 941

Single-compartment cabinet
2 x full door
Laminate worktop
5 x basket KLDIN03 ,
dim. 835x500x100mm

Dimensions (mm)		
W	D	H
920x600x900mm		

DOUBLE-DOOR CABINET WITH BASKETS

Cat. No. KL403 952

Double-compartment cabinet
2 x full door
Laminate worktop
5 x basket KLDIN01,
dim. 538x500x100mm
5 x basket KLDIN04,
dim. 268x500x100mm

Dimensions (mm)		
W	D	H
1003x600x900mm		

THREE-COMPARTMENT CABINET

Cat. No. KL403 501

4 x full door
3 x adjustable shelf
Laminate worktop

Dimensions (mm)		
Szer.	Gł.	Wys.
1600x600x900mm		
2000x600x900mm		
2400x600x900mm		

*other dimensions available on request

THREE-COMPARTMENT CABINET

Cat. No. KL403 504

Three-compartment cabinet
6 x full-extension drawer
2 x full door
1 x adjustable shelf
Laminate worktop

Dimensions (mm)		
Szer.	Gł.	Wys.
1600x600x900mm		
2000x600x900mm		
2400x600x900mm		

THREE-COMPARTMENT CABINET
Cat. No. KL403 502

Three-compartment cabinet
12 x full-extension drawer
2 x full door
1 x adjustable shelf
Laminate worktop

Dimensions (mm)*		
W	D	H
1600x600x900mm		
2000x600x900mm		
2400x600x900mm		

THREE-COMPARTMENT CABINET
Cat. No. KL403 407

9 x full-extension drawer
Laminate worktop

Dimensions (mm)*		
W	D	H
1200x600x900mm		
1500x600x900mm		

TWO-COMPARTMENT CABINET
Cat. No. KL403 301

Two-compartment cabinet
3 x full door
2 x adjustable shelf
Laminate worktop

Dimensions (mm)*		
W	D	H
1200x600x900mm		
1500x600x900mm		

TWO-COMPARTMENT CABINET
Cat. No. KL403 302

Two-compartment cabinet
2 x full door
1 x adjustable shelf
3 x full-extension drawer
Laminate worktop

Dimensions (mm)*		
W	D	H
1200x600x900mm		
1500x600x900mm		

THREE-COMPARTMENT CABINET
Cat. No. KL403 402

Three-compartment cabinet
3 x full-extension drawer
2 x full door
2 x adjustable shelf
Laminate worktop

Dimensions (mm)*		
W	D	H
1200x600x900mm		
1500x600x900mm		

THREE-COMPARTMENT CABINET
Cat. No. KL403 406

Three-compartment cabinet
9 x full-extension drawer
1 x full door
1 x adjustable shelf
Laminate worktop

Dimensions (mm)*		
W	D	H
1200x600x900mm		
1500x600x900mm		

SINGLE-DOOR CABINET
Cat. No. KL405 101

Single-compartment cabinet
1 x full door, lockable
5 x adjustable shelf

Dimensions (mm)*		
D	D	H
400x580x2100mm		
500x580x2100mm		
600x580x2100mm		

SINGLE-DOOR GLAZED CABINET
Cat. No.KL405 103

Single-compartment cabinet
1 x glazed door, lockable
5 x adjustable shelf

Dimensions (mm)*		
W	D	H
400x580x2100mm		
500x580x2100mm		
600x580x2100mm		

WARDROBE
Cat. No. KL405 102

Szafa jednokomorowa
1 x drzwi pełne, zamykane na klucz
2 x przestawna półka
1 x drążek

Dimensions (mm)*		
W	D	H
400x580x2100mm		
500x580x2100mm		
600x580x2100mm		

OPEN CABINET
Cat. No. KL405 104

Szafa jednokomorowa
5 x przestawna półka

Dimensions (mm)*		
W	D	H
400x580x2100mm		
500x580x2100mm		
600x580x2100mm		

DOUBLE-DOOR CABINET
Cat. No. KL405 202

Double-compartment cabinet
2 x full door, lockable
4 x adjustable shelf

Dimensions (mm)*		
W	D	H
400x580x2100mm		
500x580x2100mm		
600x580x2100mm		

DOUBLE-DOOR GLAZED CABINET
Cat. No. KL405 105

Double-compartment cabinet
1 x glazed door, lockable
1 x full door, lockable
4 x adjustable shelf

Dimensions (mm)*		
W	D	H
400x580x2100mm		
500x580x2100mm		
600x580x2100mm		

DOUBLE-DOOR GLAZED CABINET
Cat. No. KL405 203

Double-compartment cabinet
2 x glazed door, lockable
4 x adjustable shelf

Dimensions (mm)*		
W	D	H
400x580x2100mm		
500x580x2100mm		
600x580x2100mm		

SINGLE-DOOR CABINET WITH SAFE
Cat. No. KL405 108

Single-compartment cabinet
1 x full door, lockable
3 x adjustable shelf
1 x safe

Dimensions (mm)*		
W	D	H
400x580x2100mm		
500x580x2100mm		
600x580x2100mm		

ENDOSCOPE GLAZED CABINET
Cat. No. KL405 107

Single-compartment high cabinet
1 x glazed door, lockable
2 x retractable hanger for endoscope
1 x drip tray
1 x container for endoscope accessories

Dimensions (mm)*		
W	D	H
500x580x2100mm		
600x580x2100mm		

*other dimensions available on request

CATHETER CABINET
Cat. No. KL405 106

Single-compartment high cabinet
1 x full door, lockable
3 x retractable hanger for catheters
2 x adjustable shelf

Dimensions (mm)*		
W	D	H
500x580x2100mm		
600x580x2100mm		

SINGLE-DOOR CABINET WITH DRAWERS

Cat. No. KL405 205

Double-compartment cabinet
1 x glazed door, lockable
3 x adjustable shelf
5 x full-extension drawer

Dimensions (mm)*		
W	D	H
400x580x2100mm		
500x580x2100mm		
600x580x2100mm		

SINGLE-DOOR CABINET WITH DRAWERS

Cat. No. KL405 204

Double-compartment cabinet
1 x full door, lockable
3 x adjustable shelf
3 x full-extension drawer

Dimensions (mm)*		
W	D	H
400x580x2100mm		
500x580x2100mm		
600x580x2100mm		

SINGLE-DOOR CABINET WITH BASKETS

Cat. No. KL405 611

Single-compartment cabinet
1 x full door, lockable
Guides made of ABS plastic
14 x basket KLDIN01, dim. 538x500x100mm

Dimensions (mm)		
W	D	H
650x580x2100mm		

SINGLE-DOOR CABINET WITH BASKETS

Cat. No. KL405 613

Single-compartment cabinet
1 x full door, lockable
Guides made of ABS plastic
7 x basket KLDIN02, dim. 538x500x180mm

Dimensions (mm)		
W	D	H
650x580x2100mm		

SINGLE-DOOR GLAZED CABINET

Cat. No. KL405 616

Szafa jednokomorowa
1 x drzwi przeszklone, zamykane na klucz
Prowadnice ścienne z tworzywa ABS
14 x kosz KLDIN0, wym. 538x500x100mm

Dimensions (mm)		
W	D	H
650x580x2100mm		

SINGLE-DOOR CABINET WITH BASKETS

Cat. No. KL405 612

Single-compartment cabinet
1 x full door, lockable
Guides made of ABS plastic
6 x basket KLDIN01, dim. 538x500x100mm
4 x basket KLDIN02, dim. 538x500x180mm

Dimensions (mm)		
W	D	H
650x580x2100mm		

SINGLE-DOOR CABINET WITH BASKETS AND SAFE

Cat. No. KL405 614

Single-compartment cabinet
1 x full door, lockable
Guides made of ABS plastic
7 x basket KLDIN01, dim. 538x500x100mm
2 x basket KLDIN02, dim. 538x500x180mm
1 x safe

Dimensions (mm)		
W	D	H
650x580x2100mm		

SINGLE-DOOR CABINET FOR CATHETERS

Cat. No. KL405 619

Single-compartment cabinet
1 x full door
3 x retractable hanger for catheters
2 x adjustable shelf
Guides made of ABS plastic
2 x KLDIN01 basket, dim. 538x500x100mm

Dimensions (mm)		
W	D	H
650x580x2100mm		

OPEN TYPE CABINET
Cat. No. KL405 303

Single-compartment cabinet
5 x adjustable shelf

Dimensions (mm)*		
W	D	H
800x580x2100mm		
900x580x2100mm		
1000x580x2100mm		

DOUBLE-DOOR CABINET
Cat. No. KL405 301

Single-compartment cabinet
2 x full door, lockable
5 x adjustable shelf

Dimensions (mm)*		
W	D	H
800x580x2100mm		
900x580x2100mm		
1000x580x2100mm		

DOUBLE-DOOR GLAZED CABINET
Cat. No. KL405 302

Single-compartment cabinet
2 x glazed door, lockable
5 x adjustable shelf

Dimensions (mm)*		
W	D	H
800x580x2100mm		
900x580x2100mm		
1000x580x2100mm		

FOUR-DOORS CABINET
Cat. No. KL405 401

Double-compartment cabinet
4 x full door, lockable
4 x adjustable shelf

Dimensions (mm)*		
W	D	H
800x580x2100mm		
900x580x2100mm		
1000x580x2100mm		

ENDOSCOPE GLAZED CABINET
Cat. No. KL405 304

1 x glazed door, lockable
2 x retractable hanger for endoscope
1 x drip tray
1 x container for endoscope accessories

Dimensions (mm)*		
W	D	H
1000x580x2100mm		
1100x580x2100mm		
1200x580x2100mm		

FOUR-DOORS GLAZED CABINET
Cat. No. KL405 402

Double-compartment cabinet
2 x full door, lockable
2 x glazed door, lockable
4 x adjustable shelf

Dimensions (mm)*		
W	D	H
800x580x2100mm		
900x580x2100mm		
1000x580x2100mm		

FOUR-DOORS GLAZED CABINET
Cat. No. KL405 403

Double-compartment cabinet
4 x glazed door, lockable
4 x adjustable shelf

Dimensions (mm)		
W	D	H
800x580x2100mm		
900x580x2100mm		
1000x580x2100mm		

*other dimensions available on request

DOUBLE-DOOR CABINET WITH BASKETS
Cat. No. KL405 911

Single-compartment high cabinet
2 x full door, lockable
14 x KLDIN03 basket, dim.
835x500x100mm

Dimensions (mm)		
W	D	H
1003x580x2100mm		

DOUBLE-DOOR GLAZED CABINET WITH BASKETS

Cat. No. KL405 912

Single-compartment cabinet
2 x glazed door, lockable
14 x KLDIN03 basket, dim. 835x500x100mm

Dimensions (mm)		
W	D	H
1003x580x2100mm		

FOUR-DOOR CABINET WITH BASKETS

Cat. No. KL405 921

Szafa trzykomorowa
4 x drzwi pełne, zamykane na klucz
Prowadnice ścienne z tworzywa ABS
6 x kosz KLDIN03, wym. 835x500x100mm
8 x kosz KLDIN01, wym. 538x500x100mm
8 x kosz KLDIN04, wym. 258x500x100mm

Dimensions (mm)		
W	D	H
1003x580x2100mm		

FOUR-DOOR GLAZED CABINET WITH BASKETS

Cat. No. KL405 926

Three-compartment high cabinet
2 x full door, lockable
2 x glazed door, lockable
6 x KLDIN03 basket, dim. 835x500x100mm
4 x KLDIN02 basket, dim. 538x500x180mm
4 x KLDIN05 basket, dim. 268x500x180mm

Dimensions (mm)		
W	D	H
1003x580x2100mm		

Metal medical furniture with ECO body

OFFICE DESK
Cat. No. KL403 611

Medical desk
Open space for a computer
Shelf width 250 mm
Slide out shelf for keyboard
Worktop of laminated board

Dimensions (mm)*		
W	D	H
1000x600x750mm		

OFFICE DESK
Cat. No. KL403 601

Medical desk
Worktop of laminated board

Dimensions (mm)*		
W	D	H
1400x600x750mm		

OFFICE DESK
Cat. No. KL403 602

Medical desk
1 x door
1x adjustable shelf
1 x full-extension drawer, width 400 mm
Worktop of laminated board.

Dimensions (mm)*		
W	D	H
1200x600x750mm		

OFFICE DESK
Cat. No.KL403 603

Medical desk
3 x full-extension drawer, width 400 mm
Worktop of laminated board.

Dimensions (mm)*		
W	D	H
1200x600x750mm		

OFFICE DESK
Cat. No. KL403 605

Medical desk with 2 cabinets
cabinet 1: 1 x full door width 400 mm, 1 x adjustable shelf,
1 x full-extension drawer
cabinet 2: 4 x full-extension
drawer, width 400 mm
Worktop of laminated
board.

Dimensions (mm)*		
W	D	H
1600x600x750mm		

OFFICE DESK
Cat. No. KL403 613

Medical desk
Open space for a computer
Shelf width 250 mm
Slide out shelf for keyboard
4 x full-extension
drawer, width 400 mm
Worktop of laminated board.

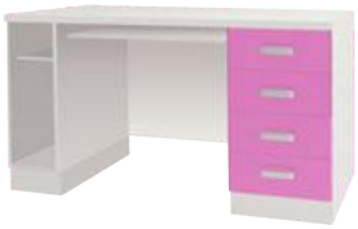

Dimensions (mm)*		
W	D	H
1400x600x750mm		

OFFICE DESK
Cat. No. KL403 612

Medical desk
cabinet: 1 x full door width 400 mm, 1 x
adjustable shelf,
1 x full-extension drawer
Open space for a computer
Shelf width 250 mm
Slide out shelf for keyboard
Worktop of laminated board

Dimensions (mm)*		
W	D	H
1400x600x750mm		

*other dimensions available on request

DESK TOP UNIT
Cat. No. KL40

Desk top unit for a medical-computer desk or counter.
Production to individual order.

MOBILE UNDER DESK CONTAINER

Cat. No. KL 402 101 - low
Cat. No. KL 402 201 - high

1 x full door
1 x adjustable shelf

Cat. No.	Dimensions (mm)*		
	W	D	H
KL402 101	450x550x650mm		
KL402 201	450x550x840mm		

MOBILE UNDER DESK CONTAINER

Cat. No. KL402 102 - low
Cat. No. KL402 202 - high

1 x full-extension drawer
1 x full door
1 x adjustable shelfpółka

Cat. No.	Dimensions (mm)*		
	W	D	H
KL402 102	450x550x650mm		
KL402 202	450x550x840mm		

MOBILE UNDER DESK CONTAINER

Cat. No. KL402 106

2 x full-extension drawer

Dimensions (mm)*		
W	D	H
460x550x650mm		

MOBILE UNDER DESK CONTAINER

Cat. No. KL402 108

4 x full-extension drawer

Dimensions (mm)*		
W	D	H
460x550x650mm		

MOBILE UNDER COUNTER CONTAINER

Cat. No. KL402 204

4 x full-extension drawer

Dimensions (mm)*		
W	D	H
450x550x840mm		

MOBILE UNDER DESK CONTAINER

Cat. No. KL402 103

3 x full-extension drawer

Dimensions (mm)*		
W	D	H
450x550x650mm		

MOBILE UNDER COUNTER CONTAINER

Cat. No. KL402 203

3 x full-extension drawer

Dimensions (mm)*		
W	D	H
450x550x840mm		

INFANT CARE & BATH STATION

Cat. No. KL400 006

1 x CORIAN type worktop
1 x bath
1 x mattress for baby changing
1 x basket KLDIN01, dim. 538x500x100 mm
2 x basket KLDIN02, dim. 538x500x180 mm
3 x full door
4 x full-extension drawer

Dimensions (mm)*		
W	D	H
1900x600x900mm		

INFANT CARE & BATH STATION

Cat. No. KL400 005

1 x bath
1 x CORIAN type worktop
2 x full door
4 x full-extension drawer
1 x mattress for baby changing

Dimensions (mm)*		
W	D	H
1650x750/600x900mm		

INFANT CARE & BATH STATION

Cat. No. KL400 004

1 x CORIAN type worktop
1 x bath
1 x mattress for baby changing
1 x open-type cabinet
4 x full-extension drawer

Dimensions (mm)*		
W	D	H
1650x750/600x900mm		

INFANT CARE STATION

Cat. No. KL400 001

1 x CORIAN type worktop
4 x full-extension drawer
1 x mattress for baby changing

Dimensions (mm)*		
W	D	H
770x750x900mm		

INFANT BATH STATION

Cat. No. KL400 003

1 x CORIAN type worktop
1 x bath
2 x full door

Dimensions (mm)*		
W	D	H
900x600x900mm		

*other dimensions available on request

KLAROMED

KLAROMED manufacturer

medical furniture KLAROLINE®

Medical furniture
made of stainless-steel grade AISI 304

Manufacturer

KLAROMED

medical furniture made of stainless-steel grade AISI 304Technology and benefits:• Front and body made in double-walled system with moisture resistant, stiffening and noise-damping insulation.

- Cabinets have four-sided, permanently integrated metal plints, with levelingcapabilities.
- Fronts with silicone seals equipped with "C" shaped handles. Under the handlesoval embossing - making it easier to grab.
- The inside walls of cabinets equipped with rasters that allow adjustment of shelfheight every 25 mm.
- Drawers mounted on roller slides with full extension and self-closing mechanism.
- Hinges that allow the door to open 160°.
- Cabinets and wall cabinets equipped with a top plinth.
- Worktops made of acid resistant steel or composite mineral conglomerate with wall boards.
- After the assembly, the furniture is tightly siliconed - the building is one surface, easy to clean and disinfect.
- A variety of cabinet configurations and a wide range of accessories (shelves, baskets, drawers, trays in sizes according to DIN or ISO standards) make it possible to adapt the construction to specific tasks and customer needs.

OPEN TYPE HANGING CABINETRY
Cat. No. KL204 103

Single-compartment wall cabinetry
2 x adjustable shelf

Dimensions (mm)*		
W	D	H
400x300x720mm		
500x300x720mm		
600x300x720mm		

OPEN TYPE HANGING CABINETRY
Cat. No. KL204 103

Single-compartment wall cabinetry
2 x adjustable shelf

Dimensions (mm)*		
W	D	H
800x300x720mm		
900x300x720mm		
1000x300x720mm		

SINGLE-DOOR HANGING CABINETRY
Cat. No. KL204 202

Single-compartment wall cabinetry
1x full door
2 x adjustable shelf

Dimensions (mm)*		
W	D	H
400x300x720mm		
500x300x720mm		
600x300x720mm		

SINGLE-DOOR GLAZED HANGING CABINETRY
Cat. No. KL204 102

Single-compartment wall cabinetry
1x glazed door
2 x adjustable shel

Dimensions (mm)*		
W	D	H
400x300x720mm		
500x300x720mm		
600x300x720mm		

DOUBLE-DOOR HANGING CABINETRY
Cat. No. KL204 201

Single-compartment wall cabinetry
2 x full door
2 x adjustable shel

Dimensions (mm)*		
W	D	H
800x300x720mm		
900x300x720mm		
1000x300x720mm		

DOUBLE-DOOR GLAZED HANGING CABINETRY
Cat. No. KL204 101

Single-compartment wall cabinetry
2 x glazed door
2 x adjustable shelf

Dimensions (mm)*		
W	D	H
800x300x720mm		
900x300x720mm		
1000x300x720mm		

OPEN TYPE CABINET
Cat. No. KL203 105

Single-compartment cabinet
1 x adjustable shelf
Worktop made of stainless-steel AISI 304
with noise-damping insulation

Dimensions (mm)*		
Szer.	Gł.	Wys.
400x600x900mm		
500x600x900mm		
600x600x900mm		

SINGLE-DOOR CABINET
Cat. No. KL203 101

Single-compartment cabinet
1 x full door
1 x adjustable shelf
Worktop made of stainless-steel AISI 304
with noise-damping insulation.

Dimensions (mm)*		
Szer.	Gł.	Wys.
400x600x900mm		
500x600x900mm		
600x600x900mm		

SINGLE-DOOR CABINET WITH DRAWER
Cat. No. KL203 102

Double-compartment cabinet
1 x full-extension drawer
1 x full door
1 x adjustable shelf
Worktop made of stainless-steel AISI 304 with noise-damping insulation.

Dimensions (mm)*		
W	D	H
400x600x900mm		
500x600x900mm		
600x600x900mm		

TWO-CARGO DRAWERS CABINET
Cat. No. KL203 108

Double-compartment cabinet
2 x cargo drawer
Worktop made of stainless-steel AISI 304 with noise-damping insulation.

Dimensions (mm)*		
W	D	H
600x600x900mm		
800x600x900mm		
900x600x900mm		

TWO DRAWERS CABINET
Cat. No. KL203 109

Single-compartment cabinet
2 x full-extension drawer
Worktop made of stainless-steel AISI 304 with noise-damping insulation.

Dimensions (mm)*		
W	D	H
400x600x900mm		
500x600x900mm		
600x600x900mm		

THREE DRAWERS CABINET
Cat. No. KL203 103

Single-compartment cabinet
3 x full-extension drawer
Worktop made of stainless-steel AISI 304 with noise-damping insulation.

Dimensions (mm)*		
W	D	H
400x600x900mm		
500x600x900mm		
600x600x900mm		

FOUR DRAWERS CABINET
Cat. No. KL203 104

Single-compartment cabinet
4 x full-extension drawer
Worktop made of stainless-steel AISI 304 with noise-damping insulation.

Dimensions (mm)*		
W	D	H
400x600x900mm		
500x600x900mm		
600x600x900mm		

FIVE DRAWER SCABINET
Cat. No. KL203 107

Single-compartment cabinet
5 x full-extension drawer
Worktop made of stainless-steel AISI 304 with noise-damping insulation.

Dimensions (mm)*		
W	D	H
400x600x900mm		
500x600x900mm		
600x600x900mm		

OPEN TYPE CABINET
Cat. No. KL203 105

Single-compartment cabinet
1 x adjustable shelf
Worktop made of stainless-steel AISI 304 with noise-damping insulation.

Dimensions (mm)*		
W	D	H
800x600x900mm		
900x600x900mm		
1000x600x900mm		

DOUBLE-DOOR CABINET
Cat. No. KL203 201

Single-compartment cabinet
2 x full door
1 x adjustable shelf
Worktop made of stainless-steel AISI 304 with noise-damping insulation.

Dimensions (mm)*		
W	D	H
800x600x900mm		
900x600x900mm		
1000x600x900mm		

*other dimensions available on request

DOUBLE-DOOR CABINET WITH ONE DRAWER

Cat. No. KL203 206

Double-compartment cabinet
1 x full-extension drawer
2 x full door
1 x adjustable shelf
Worktop made of stainless-steel AISI 304 with noise-damping insulation.

Dimensions (mm)*		
W	D	H
800x600x900mm		
900x600x900mm		
1000x600x900mm		

DOUBLE-DOOR CABINET WITH TWO DRAWERS

Cat. No. KL203 202

Double-compartment cabinet
2 x full-extension drawer
2 x full door
1 x adjustable shelf
Worktop made of stainless-steel AISI 304 with noise-damping insulation.

Dimensions (mm)*		
W	D	H
800x600x900mm		
900x600x900mm		
1000x600x900mm		

SINGLE-DOOR CABINET WITH THREE DRAWERS

Cat. No. KL203 203

Double-compartment cabinet
3 x full-extension drawer
1 x full door
1 x adjustable shelf
Worktop made of stainless-steel AISI 304 with noise-damping insulation.

Dimensions (mm)*		
W	D	H
800x600x900mm		
900x600x900mm		
1000x600x900mm		

SINGLE-DOOR CABINET WITH FOUR DRAWERS

Cat. No. KL203 204

Double-compartment cabinet
4 x full-extension drawer
1 x full door
1 x adjustable shelf
Worktop made of stainless-steel AISI 304 with noise-damping insulation.

Dimensions (mm)*		
W	D	H
800x600x900mm		
900x600x900mm		
1000x600x900mm		

SINGLE-DOOR CABINET WITH FIVED RAWERS

Cat. No. KL203 209

Double-compartment cabinet
5 x full-extension drawer
1 x full door
1 x adjustable shelf
Worktop made of stainless-steel AISI 304 with noise-damping

Dimensions (mm)*		
W	D	H
800x600x900mm		
900x600x900mm		
1000x600x900mm		

SLIDING-DOORS CABINET

Cat. No. KL203 205

Single-compartment cabinet
2 x full sliding door
1 x adjustable shelf
Worktop made of stainless-steel AISI 304 with noise-damping insulation.

Dimensions (mm)*		
W	D	H
800x600x900mm		
900x600x900mm		
1000x600x900mm		

SINGLE-DOOR CABINET

Cat. No. KL205 101

Single-compartment cabinet
1 x full door, lockable
5 x adjustable shelf

Dimensions (mm)*		
W	D	H
400x580x2100mm		
500x580x2100mm		
600x580x2100mm		

WARDROBE

Cat. No. KL205 104

Single-compartment cabinet
1 x full door, lockable
2 x adjustable shelf
1 x hanger

Dimensions (mm)*		
W	D	H
400x580x2100mm		
500x580x2100mm		
600x580x2100mm		

SINGLE-DOOR GLAZED CABINET
Cat. No. KL205 102

Single-compartment cabinet
1 x glazed door, lockable
5 x adjustable shelf

Dimensions (mm)*		
W	D	H
400x580x2100mm		
500x580x2100mm		
600x580x2100mm		

SINGLE-DOOR GLAZED CABINET
Cat. No. KL205 103

Single-compartment cabinet
1 x glazed door, lockable
5 x adjustable shelf

Dimensions (mm)*		
W	D	H
400x580x2100mm		
500x580x2100mm		
600x600x2100mm		

DOUBLE-DOOR CABINET
Cat. No. KL205 201

Double-compartment cabinet
2 x full door, lockable
4 x adjustable shelf

Dimensions (mm)*		
W	D	H
400x580x2100mm		
500x580x2100mm		
600x580x2100mm		

DOUBLE-DOOR GLAZED CABINET
Cat. No. KL205 202

Double-compartment cabinet
1 x glazed door, lockable
1 x full door, lockable
4 x adjustable shelf

Dimensions (mm)*		
W	D	H
400x580x2100mm		
500x580x2100mm		
600x580x2100mm		

DOUBLE-DOOR GLAZED CABINET
Cat. No. KL205 203

Double-compartment cabinet
1 x glazed door, lockable
1 x full door, lockable
4 x adjustable shelf

Dimensions (mm)*		
W	D	H
400x580x2100mm		
500x580x2100mm		
600x580x2100mm		

LOCKER CABINET
Cat. No. KL205 106

Four-compartments cabinet
4 x full door, lockable

Dimensions (mm)*		
W	D	H
400x580x2100mm		
500x580x2100mm		
600x580x2100mm		

ENDOSCOPE GLAZED CABINET
Cat. No. KL205 107

Single-compartment high cabinet
1 x glazed door, lockable
2 x retractable hanger for endoscope
1 x drip tray
1 x container for endoscope accessories

Dimensions (mm)*		
Szer.	Gł.	Wys.
500x580x2100mm		
600x580x2100mm		

*other dimensions available on request

CATHETER CABINET
Cat. No. KL205 108

Single-compartment high cabinet
1 x full door, lockable
3 x retractable hanger for catheters
2 x adjustable shel

Dimensions (mm)*		
Szer.	Gł.	Wys.
500x580x2100mm		
600x580x2100mm		

PASS-THROUGH CABINET
Cat. No. KL205 111

Single-compartment cabinet
2 x full door, lockable
5 x adjustable shelf

Dimensions (mm)*		
W	D	H
400x580x2100mm		
500x580x2100mm		
600x580x2100mm		

PASS-THROUGH WARDROBE
Cat. No. KL205 112

Single-compartment cabinet
2 x full door, lockable
2 x adjustable shelf
1 x hanger

Dimensions (mm)*		
W	D	H
400x580x2100mm		
500x580x2100mm		
600x580x2100mm		

PASS-THROUGH GLAZED CABINET
Cat. No. KL205 213

Single-compartment cabinet
2 x glazed door, lockable
5 x adjustable shelf

Dimensions (mm)*		
W	D	H
400x580x2100mm		
500x580x2100mm		
600x580x2100mm		

PASS-THROUGH LOCKER CABINET
Cat. No. KL205 109

Four-compartments cabinet
10 x full door, lockable
5 x fix shelf

Dimensions (mm)*		
W	D	H
400x580x2100mm		
500x580x2100mm		
600x580x2100mm		

DOUBLE-DOOR CABINET
Cat. No. KL205 301

Single-compartment cabinet
2 x full door, lockable
5 x adjustable shelf

Dimensions (mm)*		
W	D	H
800x580x2100mm		
900x580x2100mm		
1000x580x2100mm		

PASS-THROUGH WARDROBE
Cat. No. KL205 105

Double-compartment cabinet
4 x full door, lockable
4 x adjustable shelf
2 x hanger

Dimensions (mm)*		
W	D	H
800x580x2100mm		
900x580x2100mm		
1000x580x2100mm		

DOUBLE-DOOR GLAZED CABINET
Cat. No. KL205 302

Single-compartment cabinet
2 x glazed door, lockable
5 x adjustable shelf

Dimensions (mm)*		
W	D	H
800x580x2100mm		
900x580x2100mm		
1000x580x2100mm		

DOUBLE-DOOR GLAZED CABINET
Cat. No. KL205 303

Single-compartment cabinet
2 x glazed door, lockable
5 x adjustable shelf

Dimensions (mm)*		
W	D	H
800x580x2100mm		
900x580x2100mm		
1000x580x2100mm		

SLIDING-DOORS WARDROBE

Cat. No. KL205 311

Single-compartment cabinet
2 x full door
2 x adjustable shelf
1 x hanger

Dimensions (mm)*		
W	D	H
800x580x2100mm		
900x580x2100mm		
1000x580x2100mm		

SLIDING-DOORS CABINET

Cat. No. KL205 501

Single-compartment cabinet
2 x full sliding door
5 x adjustable shelf

Dimensions (mm)*		
W	D	H
800x580x2100mm		
900x580x2100mm		
1000x580x2100mm		

DOUBLESLIDING-DOOR GLAZED CABINET

Cat. No. KL205 502

Single-compartment high cabinet
2 x glazed sliding-door
5 x adjustable shelf

Dimensions (mm)*		
W	D	H
800x580x2100mm		
900x580x2100mm		
1000x580x2100mm		

DOUBLESLIDING-DOOR GLAZED CABINET

Cat. No. KL205 503

Single-compartment high cabinet
2 x glazed sliding-door
5 x adjustable shelf

Dimensions (mm)*		
W	D	H
800x580x2100mm		
900x580x2100mm		
1000x580x2100mm		

FOUR-DOORS GLAZED CABINET

Cat. No. KL205 402

Double-compartment cabinet
2 x full door, lockable
2 x glazed door, lockable
4 x adjustable shelf

Dimensions (mm)*		
W	D	H
800x580x2100mm		
900x580x2100mm		
1000x580x2100mm		

FOUR-DOORS GLAZED CABINET

Cat. No. KL205 403

Double-compartment cabinet
2 x full door, lockable
2 x glazed door, lockable
4 x adjustable shelf

Dimensions (mm)*		
W	D	H
800x580x2100mm		
900x580x2100mm		
1000x580x2100mm		

FOURSLIDING-DOORS GLAZED CABINET

Cat. No. KL205 602

Double-compartment high cabinet
2 x full sliding-door
2 x glazed sliding-door
4 x adjustable shelf

Dimensions (mm)*		
W	D	H
800x580x2100mm		
900x580x2100mm		
1000x580x2100mm		

*other dimensions available on request

FOURSLIDING-DOORS GLAZED CABINET

Cat. No. KL205 603

Double-compartment high cabinet
2 x full sliding-door
2 x glazed sliding-door
4 x adjustable shelf

Dimensions (mm)*		
W	D	H
800x580x2100mm		
900x580x2100mm		
1000x580x2100mm		

SLIDING-DOORS GLAZED CABINET

Cat. No. KL205 604

Double-compartment cabinet
4 x glazed sliding-door
5 x adjustable shelf

Dimensions (mm)*		
W	D	H
800x580x2100mm		
900x580x2100mm		
1000x580x2100mm		

PASS-THROUGH CABINET

Cat. No. KL205 315

Single-compartment cabinet
4 x full door, lockable
5 x adjustable shelf

Dimensions (mm)*		
W	D	H
800x580x2100mm		
900x580x2100mm		
1000x580x2100mm		

PASS-THROUGH FOUR-DOORS CABINET

Cat. No. KL205 512

Szafa jednokomorowa
4 x drzwi przeszklone, zamykane na klucz
5 x przestawna półka

Dimensions (mm)*		
W	D	H
800x600x2100mm		
900x600x2100mm		
1000x600x2100mm		

PASS-THROUGH WARDROBE

Cat. No. KL205 312

Double-compartment cabinet
4 x full door, lockable
4 x adjustable shelf
2 x hanger

Dimensions (mm)*		
W	D	H
800x600x2100mm		
900x600x2100mm		
1000x600x2100mm		

FOUR-DOORS CABINET

Cat. No. KL205 401

Double-compartment cabinet
4 x full door, lockable
4 x adjustable shelf

Dimensions (mm)*		
W	D	H
800x580x2100mm		
900x580x2100mm		
1000x580x2100mm		

DOUBLE-DOOR CABINET WITH 2 CARGO DRAWERS

Cat. No. KL205 404

2 x cargo drawer
2 x full door, lockable
1 x adjustable shelf

Dimensions (mm)*		
W	D	H
800x580x2100mm		
900x580x2100mm		
1000x580x2100mm		

DOUBLE-DOOR CABINET WITH 3 CARGO DRAWERS

REF. KL205 405

3 x cargo drawer
2 x full door, lockable
3 x adjustable shelf

Dimensions (mm)*		
W	D	H
800x580x2100mm		
900x580x2100mm		
1000x580x2100mm		

LOCKER CABINET

REF. KL205 116

Eight-compartments cabinet
8 x full door, lockable

Dimensions (mm)*		
W	D	H
800x580x2100mm		
900x580x2100mm		
1000x580x2100mm		

ENDOSCOPE GLAZED CABINET
Cat. No. KL205 304

Szafa jednokomorowa
2 x drzwi przeszklone, zamykane na klucz
4 x wysuwany wieszak na endoskop
1 x taca ociekowa
1 x pojemnik na akcesoria do endoskopów

Dimensions (mm)*		
W	D	H
1000xx580x2100mm		
1100xx580x2100mm		
1200xx580x2100mm		

FOUR SLIDING-DOORS CABINET
Cat. No. KL205 601

Double-compartment cabinet
4 x full sliding-door
4 x adjustable shelf

Dimensions (mm)*		
W	D	H
800x580x2100mm		
900x580x2100mm		
1000x580x2100mm		

WORKTABLE
Cat. No. KL201 101

The base equipped with feet for leveling. Table top made of acid resistant steel grade AISI 304, with noise-damping insulation and back protection.

Dimensions (mm)*		
W	D	H
600x600x900mm		
800x600x900mm		
900x600x900mm		

WORKTABLE WITH CABINET
Cat. No. KL201 201

The base iequipped with feet for leveling. Table top made of acid resistant steel grade AISI 304, with noise-damping insulation and back protection.
1 x single door cabinet with shelf, 400 mm wide

Dimensions (mm)*		
W	D	H
800x600x900mm		
1000x600x900mm		
1200x600x900mm		

WORKSTATION
Cat. No. KL201 102

Single-compartment open type cabinet. Worktop made of stainless-steel grade AISI 304, with noise-damping insulation and back protection.

Dimensions (mm)*		
W	D	H
800x600x900mm		
1000x600x900mm		
1200x600x900mm		

WORKSTATION WITH CABINET
Cat. No.. KL201 211

The base equipped with feet for leveling. Worktop made of acid resistant steel grade AISI 304, with noise-damping insulation and back protection.
1 x single door cabinet with shelf, 400 mm wide
1 x open cabinet

Dimensions (mm)*		
W	D	H
800x600x900mm		
1000x600x900mm		
1200x600x900mm		

WORKSTATION
Cat. No. KL201 103

Single-compartment open type cabinet with shelf. Worktop made of stainless-steel grade AISI 304, with noise-damping insulation and back protection.

Dimensions (mm)*		
W	D	H
700x600x900mm		
800x600x900mm		
900x600x900mm		

*other dimensions available on request

WORKTABLE WITH CABINET AND DRAWER
Cat. No. KL201 202

The base equipped with feet for leveling. Table top made of acid resistant steel grade AISI 304, with noise-damping insulation and back protection.
1 x single door cabinet with shelf, 400 mm wide
1 x full extension drawer

Dimensions (mm)*		
W	D	H
800x600x900mm		
1000x600x900mm		
1200x600x900mm		

WORKTABLE
Cat. No. KL200 001

The base equipped with feet for leveling. Table top made of acid resistant steel grade AISI 304, with noise-damping insulation.

Dimensions (mm)*		
W	D	H
1400x600x900mm		
1600x600x900mm		
1800x600x900mm		

WORKTABLE
Cat. No. KL200 002

The base equipped with feet for leveling. Table top and shelf made of acid resistant steel grade AISI 304, with noise-damping insulation.
1 x fix shelf

Dimensions (mm)*		
W	D	H
1400x600x900mm		
1600x600x900mm		
1800x600x900mm		

WORKTABLE
Cat. No. KL200 014

The base equipped with feet for leveling. Table top and shelf made of acid resistant steel grade AISI 304, with noisedamping insulation and back protection.
1 x fix shelf

Dimensions (mm)*		
W	D	H
1400x600x900mm		
1500x600x900mm		
1600x600x900mm		

WORKTABLE
Cat. No. KL201 111

The base equipped with feet for leveling. Table top made of acid resistant steel grade AISI 304, with noise-damping insulation and back protection.

Dimensions (mm)*		
W	D	H
1400x600x900mm		
1600x600x900mm		
1800x600x900mm		

DRAINAGE WORKTABLE
Cat. No. KL201 113

The base equipped with feet for leveling. Drainage worktop made of acid resistant steel grade AISI 304, with noise-damping insulation and back protection.

Dimensions (mm)*		
W	D	H
1400x600x900mm		
1600x600x900mm		
1800x600x900mm		

WORKSTATION
Cat. No. KL201 112

Double-compartment open type cabinet. Worktop made of stainless-steel grade AISI 304, with noise-damping insulation and back protection.

Dimensions (mm)*		
W	D	H
1400x600x900mm		
1600x600x900mm		
1800x600x900mm		

DRAINAGE WORKTABLE
Cat. No. KL201 104

The base equipped with feet for leveling. Drainage worktop made of acid resistant steel grade AISI 304, with noise-damping insulation and back protection.

Dimensions (mm)*		
W	D	H
600x600x900mm		
800x600x900mm		
900x600x900mm		

WORKSTATION WITH CABINET AND DRAWER
Cat. No. KL201 212

Worktop made of acid resistant steel grade AISI 304, with noise-damping insulation and back protection.
1 x single door cabinet with shelf, 400 mm wide
1 x full extension drawer
1 x open cabinet

Dimensions (mm)*		
W	D	H
800x600x900mm		
1000x600x900mm		
1200x600x900mm		

WORKTABLE WITH DRAWERS
Cat. No. KL201 203

The base equipped with feet for leveling. Table top made of acid resistant steel grade AISI 304, with noise-damping insulation and back protection.
3 x full extension drawer

Dimensions (mm)*		
W	D	H
800x600x900mm		
1000x600x900mm		
1200x600x900mm		

WORKSTATION WITH DRAWERS
Cat. No. KL201 213

Worktop made of acid resistant steel grade AISI 304, with noise-damping insulation and back protection.
3 x full extension drawer
1 x open cabinet

Dimensions (mm)*		
W	D	H
800x600x900mm		
1000x600x900mm		
1200x600x900mm		

WORKTABLE WITH DRAWERS
Cat. No. KL201 204

The base equipped with feet for leveling. Table top made of acid resistant steel grade AISI 304, with noise-damping insulation and back protection.
4 x full extension drawer

Dimensions (mm)*		
W	D	H
800x600x900mm		
1000x600x900mm		
1200x600x900mm		

WORKSTATION WITH DRAWERS
Cat. No. KL201 214

Worktop made of acid resistant steel grade AISI 304, with noise-damping insulation and back protection.
4 x full extension drawer
1 x open cabinet

Dimensions (mm)*		
W	D	H
800x600x900mm		
1000x600x900mm		
1200x600x900mm		

WORKTABLE WITH CABINET
Cat. No. KL201 301

The base equipped with feet for leveling. Table top made of acid resistant steel grade AISI 304, with noise-damping insulation and back protection.
2 x full door
1 x adjustable shelf

Dimensions (mm)*		
W	D	H
1200x600x900mm		
1400x600x900mm		
1600x600x900mm		

WORKSTATION WITH DRAWERS
Cat. No. KL201 311

Worktop made of acid resistant steel grade AISI 304, with noise-damping insulation and back protection.
2 x full door
1 x adjustable shelf
1 x open cabinet

Dimensions (mm)*		
W	D	H
1200x600x900mm		
1400x600x900mm		
1600x600x900mm		

WORKSTATION WITH CABINET AND DRAWER
Cat. No. KL201 302

The base equipped with feet for leveling. Table top made of acid resistant steel grade AISI 304, with noise-damping insulation and back protection.
2 x full door
1 x adjustable shelf
3 x full-extension drawer

Dimensions (mm)*		
W	D	H
1200x600x900mm		
1400x600x900mm		
1600x600x900mm		

*other dimensions available on request

WORKSTATION WITH CABINET AND DRAWER
Cat. No. KL201 312

Worktop made of acid resistant steel grade AISI 304, with noise-damping insulation and back protection.
2 x full door
1 x adjustable shelf
3 x full-extension drawer

Dimensions (mm)*		
W	D	H
1200x600x900mm		
1400x600x900mm		
1600x600x900mm		

WORKTABLE WITH A LIT TABLETOP
Cat. No. KL200 010

Worktable with TRESPA type lit table top. In standard: white safety glass, two electrical sockets, light diffusing plate. Base frame equipped with feet for leveling.

Dimensions (mm)*		
W	D	H
1400x700x900mm		
1600x700x900mm		
1800x900x900mm		

WORKTABLE WITH A LIT TABLETOP
Cat. No. KL200 011

Worktable with TRESPA type lit table top. In standard: white safety glass, two electrical sockets, light diffusing plate. Base frame equipped with a shelf placed on the plinth.

Dimensions (mm)*		
W	D	H
1400x700x900mm		
1600x700x900mm		
1800x900x900mm		

PLASTER PREPARATION WORKTABLE
Cat. No. KL202 001

The base equipped with feet for leveling. Table top made of acid resistant steel grade AISI 304, recessed, with noise-damping insulation and back protection.
1 x worktop with single-bowl sink with clarifier

Dimensions (mm)*		
W	D	H
1200x600x900mm		
1400x600x900mm		
1600x600x900mm		

PLASTER PREPARATION WORKTABLE
Cat. No. KL202 011

The base equipped with feet for leveling. Table top made of acid resistant steel grade AISI 304, recessed, with noise-damping insulation and back protection.
1 x worktop with single-bowl sink with clarifier
1 x open cabinet

Dimensions (mm)*		
W	D	H
1200x600x900mm		
1400x600x900mm		
1600x600x900mm		

PLASTER PREPARATION WORKTABLE
Cat. No. KL202 002

Worktop made of acid resistant steel grade AISI 304, recessed, with noise-damping insulation and back protection.
1 x worktop with single-bowl sink with clarifier
1 x double door cabinet with shelf, 800 mm width

Dimensions (mm)*		
W	D	H
1200x600x900mm		
1400x600x900mm		
1600x600x900mm		

PLASTER PREPARATION WORKTABLE
Cat. No. KL202 003

Worktop made of acid resistant steel grade AISI 304, recessed, with noise-damping insulation and back protection.
1 x worktop with single-bowl sink with clarifier
1 x single door cabinet with shelf
3 x full extension drawer

Dimensions (mm)*		
W	D	H
1200x600x900mm		
1400x600x900mm		
1600x600x900mm		

SINK WORKSTATION
Cat. No. KL203 000

Single-door cabinet, worktop with a sink made of stainless-steel grade AISI 304, recessed with noise-damping insulation, with back protection.

Dimensions (mm)*		
W	D	H
500x600x900mm		
600x600x900mm		

SINK WORKSTATION
Cat. No. KL203 012

The base equipped with feet for leveling. Worktop made of acid resistant steel grade AISI 304, recessed, with noise-damping insulation and back protection.
1 x single sink

Dimensions (mm)*		
W	D	H
800x600x900mm		
1000x600x900mm		
1200x600x900mm		

SINK WORKSTATION
Cat. No. KL203 017

The base equipped with feet for leveling. Table top made of acid resistant steel grade AISI 304, recessed with noise-damping insulation and back protection.
1 x full door
3 x full extension drawer
1 x single sink

Dimensions (mm)*		
W	D	H
1200x600x900mm		
1400x600x900mm		
1600x600x900mm		

SINK WORKSTATION
Cat. No. KL203 020

The base equipped with feet for leveling. Table top made of acid resistant steel grade AISI 304, recessed with noise-damping insulation and back protection.
1 x full door cabinet with shelf
3 x full extension drawer
1 x open cabinet
1 x single sink

Dimensions (mm)*		
W	D	H
1200x600x900mm		
1400x600x900mm		
1600x600x900mm		

SINK WORKSTATION
Cat. No. KL203 015

The base equipped with feet for leveling. Table top made of acid resistant steel grade AISI 304, recessed with noise-damping insulation and back protection.
3 x full extension drawer
1 x single sink

Dimensions (mm)*		
W	D	H
900x600x900mm		
1000x600x900mm		
1200x600x900mm		

SINK WORKSTATION
Cat. No. KL203 001

Single-compartment cabinet. Worktop made of acid resistant steel grade AISI 304, recessed with noise-damping insulation and back protection.
1 x full double door
1 x single sink

Dimensions (mm)*		
W	D	H
800x600x900mm		
900x600x900mm		
1000x600x900mm		

SINK WORKSTATION
Cat. No. KL203 003

Single-compartment cabinet. Worktop made of acid resistant steel grade AISI 304, recessed with noise-damping insulation and back protection.
1 x full double sliding door
1 x single sink

Wymiary (mm)*		
Szer.	Gł.	Wys.
900x600x900mm		
1000x600x900mm		
1200x600x900mm		

SINK WORKSTATION
Cat. No. KL203 011

The base equipped with feet for leveling. Worktop made of acid resistant steel grade AISI 304, recessed, with noise-damping insulation and back protection.
1 x double sink

Wymiary (mm)*		
Szer.	Gł.	Wys.
900x600x900mm		
1000x600x900mm		
1200x600x900mm		

SINK WORKSTATION
Cat. No. KL203 010

The base equipped with feet for leveling. Worktop made of acid resistant steel grade AISI 304, recessed, with noise-damping insulation and back protection.
1 x single sink

Dimensions (mm)*		
W	D	H
800x600x900mm		
900x600x900mm		
1000x600x900mm		

*other dimensions available on request

SINK WORKSTATION
Cat. No. KL203 018

Single-compartment open type cabinet. Worktop made of stainless-steel grade AISI 304, with noise-damping insulation and back protection.
1 x single sink

Dimensions (mm)*		
W	D	H
600x600x900mm		
800x600x900mm		
900x600x900mm		

SINK WORKSTATION
Cat. No. KL203 013

The base equipped with feet for leveling. Table top made of acid resistant steel grade AISI 304, with noise-damping insulation.
1 x single door cabinet with shelf, 400 mm wide
1 x single sink

Dimensions (mm)*		
W	D	H
900x600x900mm		
1000x600x900mm		
1200x600x900mm		

SINK WORKSTATION
Cat. No. KL203 014

The base equipped with feet for leveling. Table top made of acid resistant steel grade AISI 304, with noise-damping insulation.
1 x single door cabinet with shelf, 400 mm wide
1 x full extension drawer
1 x single sink

Dimensions (mm)*		
W	D	H
900x600x900mm		
1000x600x900mm		
1200x600x900mm		

SINK WORKSTATION
Cat. No. KL203 016

Single-compartment cabinet. Table top made of acid resistant steel grade AISI 304, recessed with noise-damping insulation and back protection.
1 x full double door with shelf, 800 mm width
1 x single sink

Dimensions (mm)*		
W	D	H
1200x600x900mm		
1400x600x900mm		
1600x600x900mm		

SINK WORKSTATION
Cat. No. KL203 019

Worktop made of acid resistant steel grade AISI 304, recessed with noise-damping insulation and back protection.
1 x full double door with shelf, 800 mm width
1 x open cabinet
1 x single sink

Dimensions (mm)*		
W	D	H
1200x600x900mm		
1400x600x900mm		
1600x600x900mm		

SINK WORKSTATION
Cat. No. KL203 002

Single-compartment cabinet. Worktop made of acid resistant steel grade AISI 304, recessed with noise-damping insulation and back protection.
1 x full double door
1 x double sink

Dimensions (mm)*		
W	D	H
800x600x900mm		
900x600x900mm		
1000x600x900mm		

SINK WORKSTATION
Cat. No. KL203 004

Single-compartment cabinet. The base is made of powder-coated steel, equipped with feet for leveling. Table top made of acid resistant steel grade AISI 304, recessed with noise-damping insulation and back protection.
1 x full double sliding door
1 x double sink

Dimensions (mm)*		
W	D	H
800x600x900mm		
900x600x900mm		
1000x600x900mm		

STORAGE SHELVING OPENWORK TYPE
Cat. No. KL200 310

5 x perforated adjustable shelf
Made of chrom-plated steel.
The base equipped with feet for leveling.

Dimensions (mm)*		
W	D	H
920x360x1820mm		
1220x360x1820mm		
1520x360x1820mm		

STORAGE SHELVING OPENWORK TYPE
Cat. No. KL200 313

5 x perforated adjustable shelf
Made of chrom-plated steel.
The base equipped with feet for leveling.

Dimensions (mm)*		
W	D	H
610x460x1820mm		
920x460x1820mm		
1220x460x1820mm		
1520x460x1820mm		

STORAGE SHELVING OPENWORK TYPE
Cat. No. KL200 314

5 x perforated adjustable shelf
Made of chrom-plated steel.
The base equipped with feet for leveling.

Dimensions (mm)*		
W	D	H
610x610x1820mm		
920x610x1820mm		
1070x610x1820mm		
1220x610x1820mm		

OPENWORK SHELF
Cat. No. KL200 311

Shelf made of chrome-plated steel.

Dimensions (mm)*		
W	D	H
920x360x25mm	920x460x25mm	610x610x25mm
1220x360x25mm	1220x460x25mm	920x610x25mm
1520x360x25mm	1520x460x25mm	1070x610x25mm
		1220x610x25mm

STORAGE SHELVING
Cat. No. KL207 501

Storage shelving entirely made of stainlesssteel grade AISI 304 with 4 fix flat shelves. Base frame equipped with feet that can be levelled.

Dimensions (mm)*		
W	D	H
600x450x2100mm		
700x450x2100mm		
800x450x2100mm		
900x450x2100mm		
1000x450x2100mm		

STORAGE SHELVING
Cat. No. KL207 502

Storage shelving entirely made of stainless-steel grade AISI 304 with 5 fix flat shelves. Base frame equipped with feet that can be levelled.

Dimensions (mm)*		
W	D	H
600x450x2100mm		
700x450x2100mm		
800x450x2100mm		
900x450x2100mm		
1000x450x2100mm		

STORAGE SHELVING
Cat. No. KL207 503

Storage shelving entirely made of stainlesssteel grade AISI 304 with 4 adjustable flat shelves. Base frame equipped with feet that can be levelled.

Dimensions (mm)*		
W	D	H
600x450x2100mm		
700x450x2100mm		
800x450x2100mm		
900x450x2100mm		
1000x450x2100mm		

STORAGE SHELVING
Cat. No. KL207 601

Storage shelving entirely made of stainlesssteel grade AISI 304 with 4 fix rod-made shelves. Base frame equipped with feet that can be levelled.

Dimensions (mm)*		
W	D	H
600x400x2100mm		
700x400x2100mm		
800x400x2100mm		
900x400x2100mm		
1000x400x2100mm		

URINE BOTTLES & BEDPANS STORAGE SHELVING
Cat. No. KL207 602

Storage shelving entirely made of stainless-steel grade AISI 304 with four - set an angle, rod-made shelves, mounted permanently. Base frame equipped with feet that can be levelled.

Dimensions (mm)*		
W	D	H
600x400x2100mm		
700x400x2100mm		
800x400x2100mm		
900x400x2100mm		
1000x400x2100mm		

*other dimensions available on request

STORAGE SHELVING
Cat. No. KL207 603

Storage shelving entirely made of stainless-steel grade AISI 304 with 4 x adjustable rod-made shelves. Base frame equipped with feet that can be levelled.

Dimensions (mm)*		
W	D	H
600x400x2100mm		
700x400x2100mm		
800x400x2100mm		
900x400x2100mm		
1000x400x2100mm		

WALL-MOUNTED RACK
Cat. No. KL207 403

Wall-mounted rack with 3 flat shelves, made of stainless-steel grade AISI 304

Dimensions (mm)*		
W	D	H
600x300x600mm		
800x300x600mm		
900x300x600mm		
1000x300x600mm		
1100x300x600mm		
1200x300x600mm		

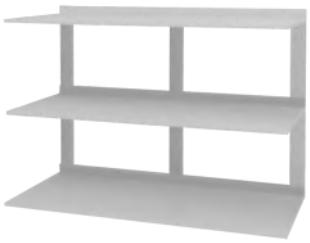

FULL-TYPE SHELF
Cat. No. KL207 511

Shelf for storage shelving.

Dimensions (mm)*	
W	D
600x450mm	
700x450mm	
800x450mm	
900x450mm	
1000x450mm	

WALL-MOUNTED RACK
Cat. No. KL207 402

Wall-mounted rack with 2 flat shelves, made of stainless-steel grade AISI 304.

Dimensions (mm)*		
W	D	H
600x300x300mm		
800x300x300mm		
900x300x300mm		
1000x300x300mm		
1100x300x300mm		
1200x300x300mm		

ROD-MADE SHELF
Cat. No. KL207 611

Półka prętowa wykonana ze stali kwasoodpornej gat. OH18N9 do regału o regulowanym rozstawie półek

Dimensions (mm)*	
W	D
600x400mm	
700x400mm	
800x400mm	
900x400mm	
1000x400mm	

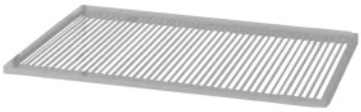

WALL-MOUNTED RACK
Cat. No. KL207 401

Wall-mounted rack with 1 flat shelves, made of stainless-steel grade AISI 304

Dimensions (mm)*		
W	D	H
600x300x300mm		
800x300x300mm		
900x300x300mm		
1000x300x300mm		
1100x300x300mm		
1200x300x300mm		

WALL-MOUNTED RACK
Cat. No. KL207 702

Wall-mounted rack with 5 raised-edges shelves, with fixed spacing, made of stainless-steel grade AISI 304.

Dimensions (mm)*		
W	D	H
600x300x1800mm		
900x300x1800mm		
1200x300x1800mm		

SHELF
Cat. No. KL207 736

Shelf with raised edges intended for wall-mounted or mobile storage support.

Dimensions (mm)*		
W	D	H
580x260x150mm		

WIRE HANGER
Cat. No. KL207 737

Wire hanger with 8 hooks for wall-mounted storage support.

Dimensions (mm)*		
W	D	H
580x180x100mm		

URINE BOTTLES MESH SHELF
Cat. No. KL207 734

Półka prętowa wykonana ze stali kwasoodpornej gat. OH18N9 na kaczki do regału listwowego.

Dimensions (mm)*		
W	D	H
580x190x300mm		

ROD-MADE SHELF
Cat. No. KL207 735

Półka prętowa wykonana ze stali wasoodpornej gat. OH18N9 podwójna do regału listwowego.

Dimensions (mm)*		
W	D	H
580x260x300mm		

BASKET
Cat. No. KL207 731

Sterile equipment basket 1 STE.

Dimensions (mm)*		
W	D	H
580x285x260mm		

BASKET
Cat. No. KL207 732

Sterile equipment basket 1/2 STE.

Dimensions (mm)*		
W	D	H
580x285x130mm		

BASKET
Cat. No. KL207 733

Sterile equipment basket 1 STE with cut-out.

Dimensions (mm)*		
W	D	H
580x285x260mm		

HOOK TROLLEY
Cat. No. KL207 703

Hook trolley (mobile storage support) made of stainless-steel grade AISI 304.

Dimensions (mm)*		
W	D	H
530x600x1500mm		

SHOE RACK
Cat. No. KL207 738

Shoe rack for storage support, with 12 hanging bars, holds a maximum of 6 pairs of shoes.

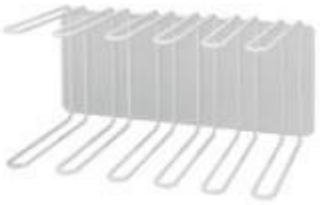

Dimensions (mm)*		
W	D	H
580x280x280mm		

HANGER
Cat. No. KL207 739

Hanger for hoses or operation slings for strip rack, made of acid-resistant steel grade AISI 304.

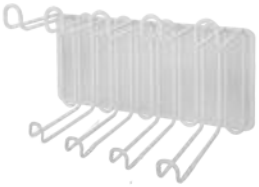

Dimensions (mm)*		
W	D	H
580x180x280mm		

WALL-MOUNTED HOOK RAIL
Cat. No. KL207 701

Wall-mounted hook rail (storage support) made of stainless-steel grade AISI 304.

Dimensions (mm)*
900mm
1500mm
1800mm

*other dimensions available on request

KLAROMED

KLAROMED manufacturer

medical furniture catalogue KLAROLINE

Additional equipment
for furniture

Manufacturer

KLAROMED

Mineral and epoxy resin worktops 179
Laminated and postformed worktops 180
Stainless steel grade AISI 304 worktops 181
Sinks and water mixers 182
Furniture colours 185

WORKTOPS

The worktop is an important, most exploited element of a furniture construction, therefore the right choice of worktop is very important, therefore, the right choice of worktop is very important and should be well designed. The place of use of the furniture and the activities performed on the countertop as well as the chemical reagents used should be the main determinant in the choosing process.

The most popular worktops in the medical environment:

- Monolithic high-pressure laminate (Trespa type)
- Made of minerals and epoxy-acrylic resins, so-called conglomerate (Corian type)
- Laminated and postforming
- Made of acid-resistant steel grade AISI 304

Worktop type	Resistance to:				
	acids	alkalis	mechanical	mechanical	UV
monolithic high-pressure laminate	☺☺☺☺	☺☺☺☺	☺☺☺	☺☺☺	☺☺☺☺
made of minerals and epoxy-acrylic resins	☺☺	☺☺	☺☺☺	☺☺	☺☺
laminated and postforming	☺	☺	☺	☺☺☺	☺☺☺
stainless steel AISI 304	☺☺☺	☺☺☺	☺☺☺	☺☺☺☺	☺☺☺☺

Rating	☺☺☺☺ very good	☺☺☺ good	☺☺ for a short time	☺ poor	no resistance

Monolithic high-pressure laminate worktop

TRESPA type worktop made of high pressure laminate is called "Max Compact" or "Max-Resistance". Monolithic work surfaces are composed of compressed cellulose fibers forming a hard black core and then coated on both sides with phenolic resin. It is a worktop with good mechanical properties, very good chemical resistance and resistance to dyes. Due to the high resistance, it is used as a finish of laboratory furniture.

Worktop is available in two colours:

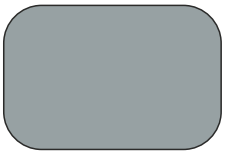

RAL 7047

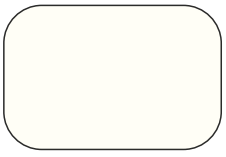

RAL 9010

Worktop made of minerals & epoxy-acrylic resins

Corian type worktops are made of a monolithic plate formed from a mixture of minerals and epoxy-acrylic resins. It can be renewed - grind and polish. A great advantage is the possibility of making invisible joins between elements, so that the grinded and polished looks like made from one piece.

Other properties: flammable, non-absorbent, warm to the touch.

The worktops we use have an anti-splash groove.

Design palette:

snow road

pearl white

sunny sand

ivory

foggy morning

tea beige

cappuccino

milk chocolate

grey platinum

steel granite

graphite landscape

starry night

pistachio green

august grass

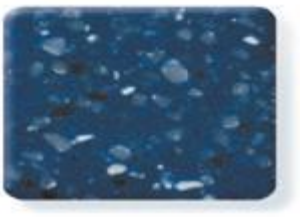
cosmic limbo

starry red

The patterns of worktops shown may not reflect the actual ones and do not represent a colour sampler.

Laminated and postforming worktop

Postforming worktops made of chipboard, glued with high quality laminate with a smooth surface. The bottom is covered with stress-resistant paper, which prevents deformation of the worktop, while simultaneously providing additional protection against moisture. Boards can be made with a straightedge (PVC edge) or with a rounded postforming edge. Finish: gloss or semi-gloss. Laminated boards are easy to keep clean, resistant to temperatures up to +120°C. Its use is not recommended in areas of high humidity and laboratories where highly aggressive substances are handled. Other features: warm to the touch, environmentally friendly (hygiene class E1).

The worktops we use have an anti-splash groove.

Design palette:

carrara marble

light sand

Bilbao sand

conkorde

rumba

selena

salsa

sand

olivia

sandstone

granite seville

tarna

green marble

consuela

dark granite

dolores

The patterns of worktops shown may not reflect the actual ones and do not represent a colour sampler.

Worktop made of stainless-steel grade AISI 304

Worktops made of acid-resistant steel - corrosion resistant sheet grade AISI 304 (1.4301). Stainless-steel worktops are characterized by a variety of chemical resistance depending on the type of reagents, good resistance to mechanical damage, disinfection and UV. They are suitable for work with medium aggressive substances, eg. in isotopic, medical, microbiological laboratories.

Types of stainless-steel wortops: with or without noise-damping insulation, with back protection, with two or three-sided protection, flat or recessed..

EXAMPLES OF WORKTOPS:

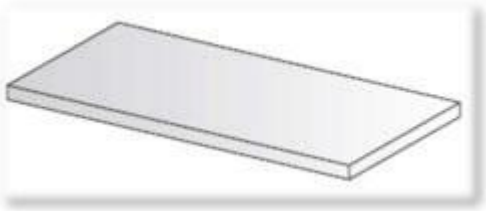

flat worktop

recessed worktop

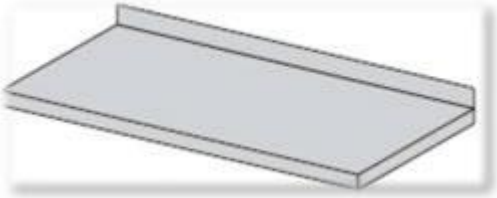

flat worktop with back protection

recessed worktop with back protection

flat worktop with 3-sided protection

recessed worktop with 3-sided protection

SINKS AND WATER MIXERS

SINGLE-BOWL SINK
Cat.No. KL203 31

Dimensions (mm)	
Sink	600x600mm
Bowl	340x340x150mm

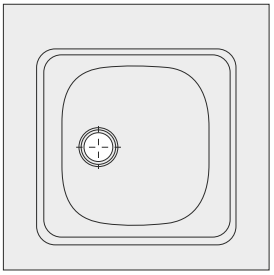

SINGLE-BOWL SINK
Cat.No. KL203 41

Dimensions (mm)	
Sink	500x500mm
Bowl	340x370x150mm

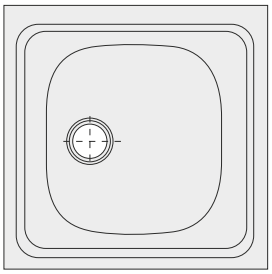

SINGLE-BOWLSINK
Cat.No. KL203 11

Dimensions (mm)	
Sink	455x435mm
Bowl	360x355x150mm

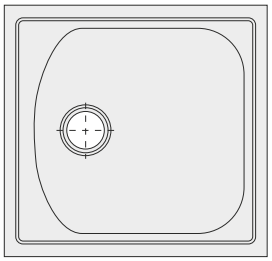

SINGLE-BOWLSINK
Cat.No. KL203 21

Dimensions (mm)	
Sink	o 430 mm
Komora	o 380x150 mm

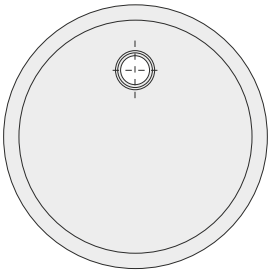

SINGLE-BOWL SINK with drainboard
Cat.No. KL203 32

Dimensions (mm)	
Sink	800x600mm
Bowl	340x370x150mm

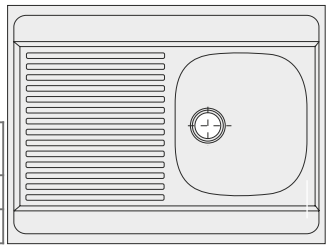

SINGLE-BOWL SINK with drainboard
Cat.No. KL203 42

Dimensions (mm)	
Sink	800x500mm
Bowl	340x370x150mm

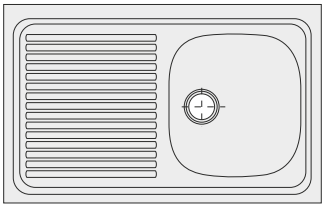

SINGLE-BOWL SINK with drainboard
Cat.No. KL203 12

Dimensions (mm)	
Sink	780x435mm
Bowl	360x355x150mm

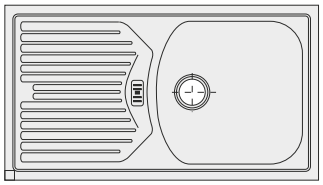

SINGLE-BOWL SINK with drainboard
Cat.No. KL203 22

Dimensions (mm)	
Sink	770x445mm
Bowl	410x150mm

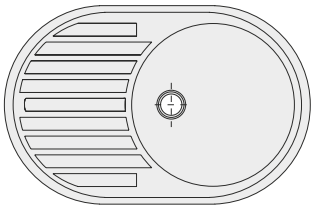

SINGLE-BOWL SINK with drainboard
Cat.No. KL203 23

Dimensions (mm)	
Sink	800x445mm
Bowl	⌀ 360x150mm

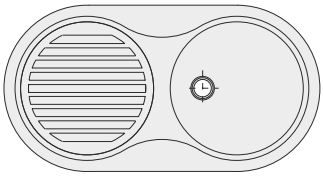

DOUBLE-BOWL SINK
Cat.No. KL203 24

Dimensions (mm)	
Sink	800x445 mm
Bowl	⌀ 380x150 mm

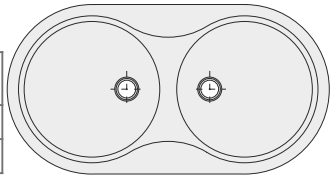

DOUBLE-BOWL SINK
Cat.No. KL203 13

Dimensions (mm)	
Sink	780x435mm
Bowl	360x355x150mm

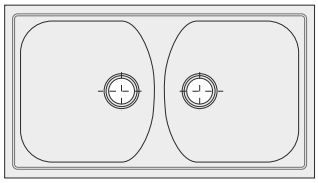

DOUBLE-BOWL SINK
Cat.No. KL203 43

Dimensions (mm)	
Sink	800x500mm
Bowl	340x370x150mm

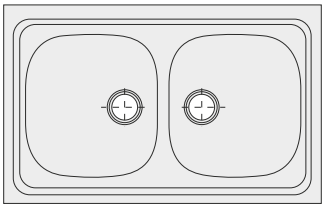

TOUCHLESS WALL-MOUNTED FAUCET
Cat.No. KLBS351

Mixer with a thermostatic regulator and an integrated electronic control.
Swivel spout.

ELBOW WALL-MOUNTED FAUCET
Cat.No. KLBS352

Mixer with extended medical handle.
Swivel spout.

STANDARD FAUCET
Cat.No. KLBN353

Swivel spout.

ELBOW FAUCET
Cat.No. KLBN354

Mixer with extended medical handle.
Swivel spout.

FAUCET WITH PULL-OUT SPOUT
Cat.No. KLBN355

Spout - swivel and pull-out up to ~60 cm.

TWIN HANDLE MIXER TAP
Cat.No. KLBN356

Mixing-ratio of cold & hot water achives by turning handles, swivel spout.

TOUCHLESS FAUCET
Cat.No. KLBN357

mixer with integrated control electronics

STANDING MIXER FAUCET with pull-out spout
Cat.No. KLBN358

FURNITURE COLOURS

BODIES:

RAL 9001 - metal/aluminium elements
light beige - board elements

RAL 7047 - metal/aluminium elementss
light grey - board elements

FRONTS:

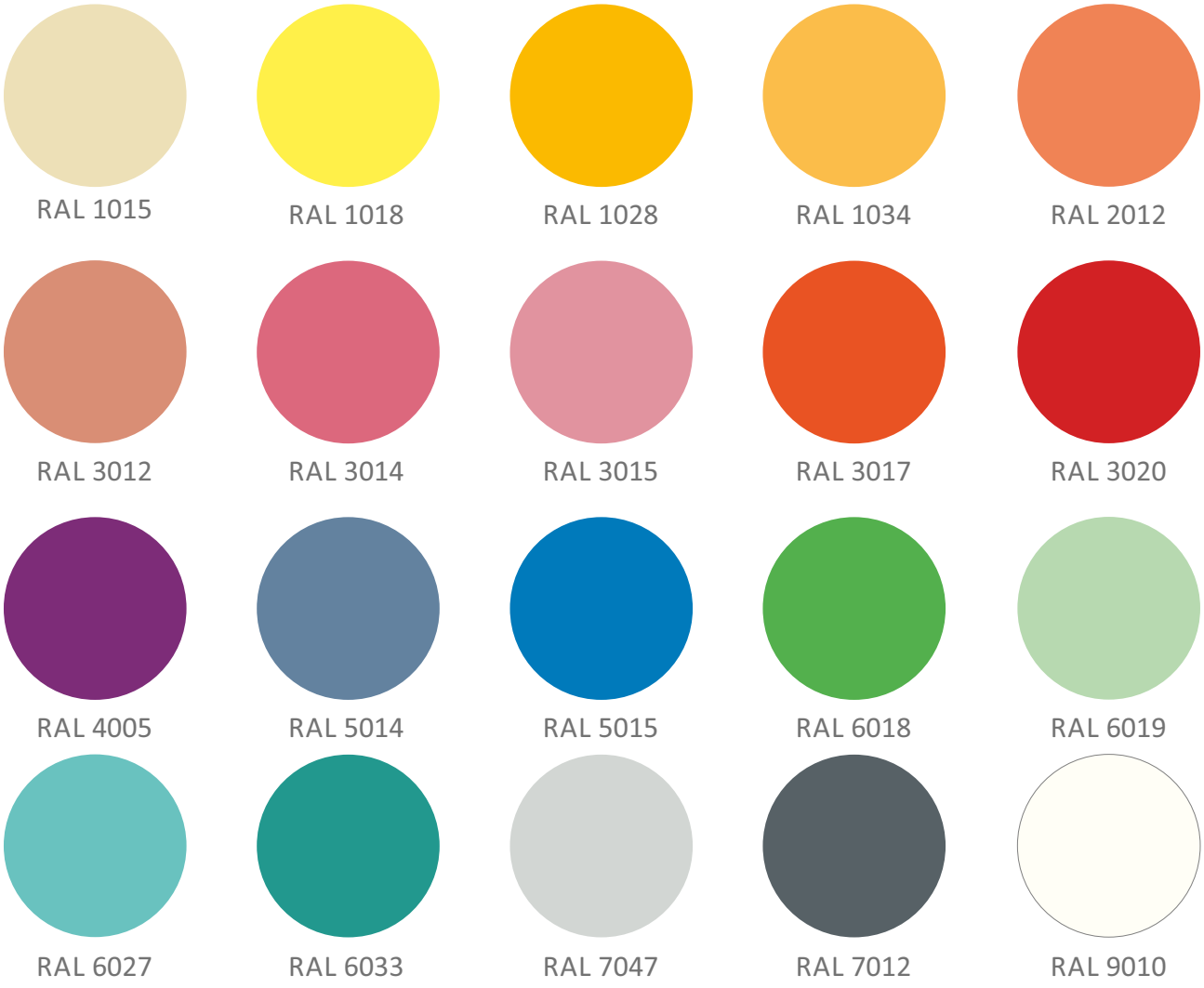

Other RAL Classic colours are available on request.
Colour samples for illustration purposes only, colours may differ from the real ones

KLAROMED

KLAROMED manufacturer

medical furniture catalogue KLAROLINE

Mobile
medical furniture

Manufacturer

KLAROMED

The line of medical trolleys, manufactured by our company is a supplement to the offer of our medical furniture. The trolleys are performed in three different series:

- made of galvanized steel powder-painted with antibacterial features paints
- made of stainless steel AISI 304
- on a body made of aluminium profile filled with laminated board of E1 hygiene class

Advantages of our trolleys:

- Doors and drawers of trolleys are made of double metal sheets with water-resistant soundproofing.
- Worktops of trolleys are made of high-quality ABS plastic or stainless steel AISI 304. Worktops with rims or three-sided flange.
- The handles are "C" shaped. Under the handles there are oval embossing - making it easier to grip.
- Drawers with full extension and self-closing mechanism.
- The hinges allow the door to open 160°.
- The inside walls of the cabinets are fitted with fixings allowing the positioning of the shelves to be adjusted every 25 mm.
- Ergonomic handle Ø 25 mm, comfortably shaped for easy rolling of the trolley.
- Chassis of the trolley: 4 wheels Ø 125 mm, 2 wheels with brakes
- The bumpers are in the form of round discs to protect the trolley during transport.
- A variety of drawer configurations and a wide range of accessories (e.g. worktops, extensions, baskets, containers, hangers, dividers, etc.) allow to customize the trolley to the specific tasks and customer needs.

TROLLEY CHARACTERISTICS

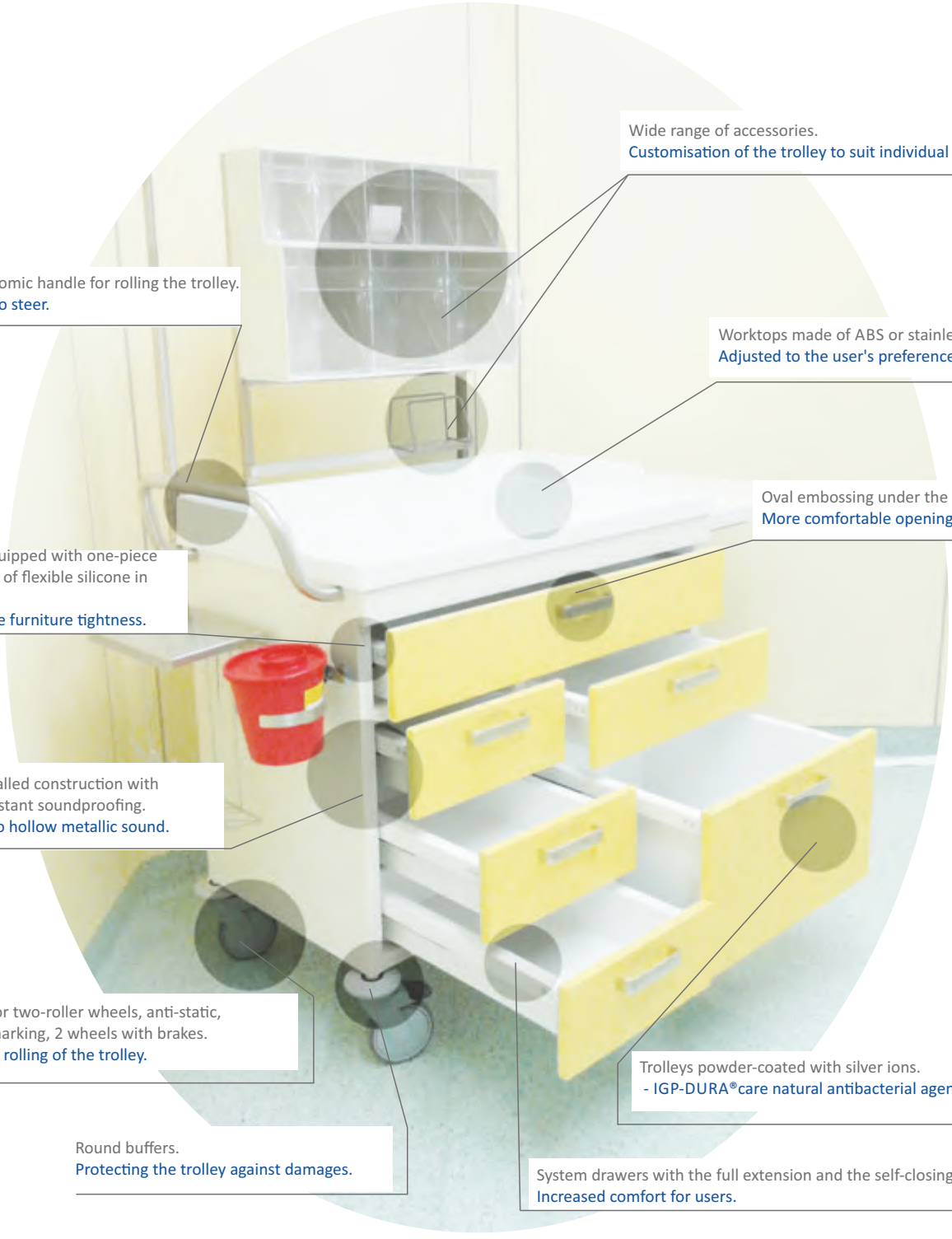

Wide range of accessories.
Customisation of the trolley to suit individual needs.

Ergonomic handle for rolling the trolley.
Easy to steer.

Worktops made of ABS or stainless steel AISI 304.
Adjusted to the user's preferences.

Oval embossing under the handle.
More comfortable opening.

The fronts equipped with one-piece gaskets made of flexible silicone in bright colour.
Guarantee the furniture tightness.

Double-walled construction with water-resistant soundproofing.
There is no hollow metallic sound.

One or two-roller wheels, anti-static, nonmarking, 2 wheels with brakes.
Quiet rolling of the trolley.

Trolleys powder-coated with silver ions.
- IGP-DURA®care natural antibacterial agent.

Round buffers.
Protecting the trolley against damages.

System drawers with the full extension and the self-closing mechanism.
Increased comfort for users.

The technology and materials used to manufacture the trolleys are
GUARANTEE OF HIGH QUALITY
and for many years of use..

EXAMPLE OF TROLLEY CONFIGURATION

METAL MEDICAL TROLLEYS MADE OF POWDER-COATED STEEL

MEDICAL TROLLEY
Cat.No. KL106 023

Worktop made of stainless steel AISI 304
Handle to guide the trolley
1 x full-extension drawer
1 x fixed shelf
1 x basket KLDIN02, dim. 538x500x180mm
4 wheels Ø 125 mm, 2 with brakes

Dimensions (mm)*		
W	D	H
820x660x990 mm		

MEDICAL TROLLEY
Cat.No. KL106 002

Worktop made of stainless steel AISI 304
Handle to guide the trolley
2 x full-extension drawer
1 x fixed shelf
4 wheels Ø 125 mm, 2 with brakes

Dimensions (mm)*		
W	D	H
820x660x990 mm		

MEDICAL TROLLEY
Cat.No. KL106 001

Worktop made of stainless steel AISI 304
Handle to guide the trolley
1 x full-extension drawer
1 x fixed shelf
4 wheels Ø 125 mm, 2 with brakes

Dimensions (mm)*		
W	D	H
820x660x990 mm		

Zgodnie z MDD93/42/EEC

MEDICAL TROLLEY
Cat.No. KL106 022

Worktop made of stainless steel AISI 304
Handle to guide the trolley
1 x full-extension drawer
2 x fixed shelf
4 wheels Ø 125 mm, 2 with brakes

Dimensions (mm)*		
W	D	H
820x660x990 mm		

MEDICAL TROLLEY
Cat.No. KL106 018

Worktop made of stainless steel AISI 304
Handle to guide the trolley
2 x full-extension drawer
2 x full door
1 x adjustable shelf
4 wheels Ø 125 mm, 2 with brakes

Dimensions (mm)*		
W	D	H
820x660x990 mm		

MEDICAL TROLLEY
Cat.No. KL106 020

Worktop made of stainless steel AISI 304
Handle to guide the trolley
3 x full-extension drawer
4 wheels Ø 125 mm, 2 with brakes

Dimensions (mm)*		
W	D	H
820x660x990 mm		

MEDICAL TROLLEY
Cat.No. KL106 025

Worktop made of stainless steel AISI 304
Handle to guide the trolley
2 x full-extension drawer
1 x fixed shelf
1 x basket KLDIN02, dim. 538x500x180mm
4 wheels Ø 125 mm, 2 with brakes

Dimensions (mm)*		
W	D	H
820x660x990 mm		

MEDICAL TROLLEY
Cat.No. KL106 019

Worktop made of stainless steel AISI 304
Handle to guide the trolley
3 x full-extension drawer
1 x open cupboard
4 wheels Ø 125 mm, 2 with brakes

Dimensions (mm)*		
W	D	H
820x660x990 mm		

MEDICAL TROLLEY

Cat.No. KL106 026

Worktop made of stainless steel AISI 304
Handle to guide the trolley
2 x full-extension drawer
1 x fixed shelf
2 x basket KLDIN01, dim. 538x500x100mm
4 wheels Ø 125 mm, 2 with brakes

Dimensions (mm)*		
W	D	H
820x660x990 mm		

MEDICAL TROLLEY

Cat. No. KL106 008

Worktop made of stainless steel AISI 304
Handle to guide the trolley
7 x full-extension drawer
4 wheels Ø 125 mm, 2 with brakes

Dimensions (mm)*		
W	D	H
820x660x990 mm		

MEDICAL TROLLEY

Cat.No. KL106 017

Worktop made of stainless steel AISI 304
Handle to guide the trolley
6 x full-extension drawer
4 wheels Ø 125 mm, 2 with brakes

Dimensions (mm)*		
W	D	H
820x660x990 mm		

MEDICAL TROLLEY

Cat.No. KL106 015

Worktop made of stainless steel AISI 304
Handle to guide the trolley
5 x full-extension drawer
4 wheels Ø 125 mm, 2 with brakes

Dimensions (mm)*		
W	D	H
820x660x990 mm		

MEDICAL TROLLEY

Cat.No. KL106 014

Worktop made of stainless steel AISI 304
Handle to guide the trolley
7 x full-extension drawer
4 wheels Ø 125 mm, 2 with brakes

Dimensions (mm)*		
W	D	H
820x660x990 mm		

MEDICAL TROLLEY

Cat.No. KL106 007

Worktop made of stainless steel AISI 304
Handle to guide the trolley
4 x full-extension drawer
1 x full door
1 x adjustable shelf
4 wheels Ø 125 mm, 2 with brakes

Dimensions (mm)*		
W	D	H
820x660x990 mm		

MEDICAL TROLLEY

Cat.No. KL106 006

Worktop made of stainless steel AISI 304
Handle to guide the trolley
4 x full-extension drawer
1 x full door
2 x adjustable shelf
4 wheels Ø 125 mm, 2 with brakes

Dimensions (mm)*		
W	D	H
820x660x990 mm		

*other dimensions available on request

MEDICAL TROLLEY

Cat.No. KL106 009

Worktop made of stainless steel AISI 304
Handle to guide the trolley
4 x full-extension drawer
1 x sliding side shelf
4 wheels Ø 125 mm, 2 with brakes

Dimensions (mm)*		
W	D	H
820x660x990 mm		

METAL MEDICAL TROLLEYS MADE OF POWDER-COATED STEEL

MEDICAL TROLLEY

Cat.No. KL106 016

Worktop made of stainless steel AISI 304
Handle to guide the trolley
7 x full-extension drawer
4 wheels Ø 125 mm, 2 with brakes

Dimensions (mm)*		
W	D	H
820x660x990 mm		

MEDICAL TROLLEY WITH ACCESSORIES

Cat.No. KL106 011

Recessed ABS worktop
Handle to guide the trolley
2 x full-extension drawer
4 wheels Ø 125 mm, 2 with brakes
Accessories: holder with waste bowl, catheter holder, 2 x rails for accessories, extension with 7 tiltable plastic containers, IV-pole holder, rack with lid for waste bag, holder for used needles container.

Dimensions (mm)*		
W	D	H
820x660x990 mm		

MEDICAL TROLLEY WITH ACCESSORIES

Cat.No. KL106 012

Recessed ABS worktop
Handle to guide the trolley
4 x full-extension drawer
4 wheels Ø 125 mm, 2 with brakes
Accessories: holder with waste bowl, catheter holder, 2 x rails for accessories, extension with 7 tiltable plastic containers, IV-pole holder, rack with lid for waste bag, holder for used needles container.

Dimensions (mm)*		
W	D	G
820x660x990 mm		

MEDICAL TROLLEY WITH ACCESSORIES

Cat.No. KL106 013

Recessed and 3-sided flange ABS worktop
Handle to guide the trolley
7 x full-extension drawer
4 wheels Ø 125 mm, 2 with brakes
Accessories: holder with waste bowl, catheter holder, 2 x rails for accessories, extension with 7 tiltable plastic containers, IV-pole holder, rack with lid for waste bag, holder for used needles container, sliding side shelf

Dimensions (mm)*		
W	D	Wys.
820x660x990 mm		

MEDICAL TROLLEY

Cat.No. KL106 010

Recessed ABS worktop
Handle to guide the trolley
2 x full door
2 x adjustable shelf
4 wheels Ø 125 mm, 2 with brakes

Dimensions (mm)*		
W	D	H
820x660x990 mm		

MEDICAL TROLLEY

Cat.No. KL106 111

Recessed and 3-sided flange ABS worktop
Handle to guide the trolley
2 x full door
2 x adjustable shelf
4 wheels Ø 125 mm, 2 with brakes

Dimensions (mm)*		
W	D	H
820x660x990 mm		

MEDICAL TROLLEY

Cat.No. KL106 211

Recessed and 3-sided flange ABS worktop
Handle to guide the trolley
1 x full-extension drawer
2 x full door
2 x adjustable shelf
4 wheels Ø 125 mm, 2 with brakes

Dimensions (mm)*		
W	D	H
820x660x990 mm		

MEDICAL TROLLEY

Cat.No. KL106 003

Worktop made of stainless steel AISI 304
Handle to guide the trolley
4 x full-extension drawer
4 wheels Ø 125 mm, 2 with brakes

Dimensions (mm)*		
W	D	H
820x660x990 mm		

MEDICAL TROLLEY

Cat.No. KL106 005

Worktop made of stainless steel AISI 304
Handle to guide the trolley
1 x full-extension drawer
2 x full door
2 x adjustable shelf
4 wheels Ø 125 mm, 2 with brakes

Dimensions (mm)*		
W	D	H
820x660x990 mm		

Zgodnie z MDD93/42/EEC

MEDICAL TROLLEY

Cat.No. KL109 007

Recessed ABS worktop
Handle to guide the trolley
5 x full-extension drawer
2 x cargo drawer
4 wheels Ø 125 mm, 2 with brakes

Dimensions (mm)*		
W	W	H
1130x660x990 mm		

MEDICAL TROLLEY

Cat.No. KL109 008

Recessed ABS worktop
Handle to guide the trolley
4 x full-extension drawer
2 x full door
2 x adjustable shelf
4 wheels Ø 125 mm, 2 with brakes

Dimensions (mm)*		
W	D	H
1130x660x990mm		

MEDICAL TROLLEY

Cat.No. KL109 001

Recessed ABS worktop
Handle to guide the trolley
2 x full door
2 x adjustable shelf
4 wheels Ø 125 mm, 2 with brakes

Dimensions (mm)*		
W	D	H
1130x660x990 mm		

MEDICAL TROLLEY

Cat.No. KL106 004

Worktop made of stainless steel AISI 304
Handle to guide the trolley
8 x full-extension drawer
4 wheels Ø 125 mm, 2 with brakes

Dimensions (mm)*		
W	D	H
820x660x990 mm		

Zgodnie z MDD93/42/EEC

MEDICAL TROLLEY

Cat.No. KL109 003

Recessed ABS worktop
Handle to guide the trolley
4 x full-extension drawer
4 wheels Ø 125 mm, 2 with brakes

Dimensions (mm)*		
W	D	H
1130x660x990 mm		

*other dimensions available on request

MEDICAL TROLLEY

Cat.No. KL109 005

Recessed ABS worktop
Handle to guide the trolley
6 x full-extension drawer
4 wheels Ø 125 mm, 2 with brakes

Dimensions (mm)*		
W	D	H
1130x660x990 mm		

METAL MEDICAL TROLLEYS MADE OF POWDER-COATED STEEL

MEDICAL TROLLEY

Cat.No. KL109 002

Recessed ABS worktop
Handle to guide the trolley
2 x full-extension drawer
2 x full door
1 x adjustable shelf
4 wheels Ø 125 mm, 2 with brakes

Dimensions (mm)*		
W	D	H
820x660x990 mm		

MULTIFUNCTIONAL TROLLEY

Cat.No. KL109 111

Recessed and 3-sided flange ABS worktop
Handle to guide the trolley
2 x full door
2 x adjustable shelf
4 wheels Ø 125 mm, 2 with brakes

Wymiary (mm)*		
W	D	H
1130x660x990 mm		

MEDICAL TROLLEY

Cat.No. KL109 004

Recessed ABS worktop
Handle to guide the trolley
12 x full-extension drawer
4 wheels Ø 125 mm, 2 with brakes

Dimensions (mm)*		
Szer.	Gł.	Wys.
1130x660x990 mm		

MULTIFUNCTIONAL TROLLEY

Cat.No. KL109 211

Handle to guide the trolley
1 x full-extension drawer
2 x full door
2 x adjustable shelf
4 wheels Ø 125 mm, 2 with brakes

Dimensions (mm)*		
Szer.	Gł.	Wys.
1130x660x990 mm		

MEDICAL TROLLEY

Cat.No. KL109 006

Recessed ABS worktop
Handle to guide the trolley
9 x full-extension drawer
4 wheels Ø 125 mm, 2 with brakes

Dimensions (mm)*		
W	D	H
1130x660x990 mm		

MEDICAL TROLLEY WITH ACCESSORIES

Cat.No. KL109 011

Recessed ABS worktop
Handle to guide the trolley
2 x full-extension drawer
4 wheels Ø 125 mm, 2 with brakes
Accessories: holder with waste bowl, catheter holder, 2 x rails for accessories, extension with 7 tiltable plastic containers, IV-pole holder, rack with lid for waste bag, holder for used needles container.

Dimensions (mm)*		
W	D	H
1130x660x990 mm		

MULTIFUNCTIONAL TROLLEY

Cat.No. KL109 010

Recessed ABS worktop
Handle to guide the trolley
2 x full door
2 x adjustable shelf
4 wheels Ø 125 mm, 2 with brakes

Dimensions (mm)*		
W	D	H
1130x660x990 mm		

MEDICAL TROLLEY WITH ACCESSORIES

Cat.No. KL109 012

Recessed ABS worktop
Handle to guide the trolley
4 x full-extension drawer
4 wheels Ø 125 mm, 2 with brakes
Accessories: holder with waste bowl, catheter holder, 2 x rails for accessories, extension with 7 tiltable plastic containers, IV-pole holder, rack with lid for waste bag, holder for used needles container.

Dimensions (mm)*		
W	D	H
1130x660x990 mm		

MEDICAL TROLLEY WITH ACCESSORIES

Nr kat. KL109 013

Recessed and 3-sided flange ABS worktop
Handle to guide the trolley
7 x full-extension drawer
4 wheels Ø 125 mm, 2 with brakes
Accessories: holder with waste bowl, catheter holder, 2 x rails for accessories, extension with 7 tiltable plastic containers, IV-pole holder, rack with lid for waste bag, holder for use

Dimensions (mm)*		
W	D	H
1130x660x990 mm		

SINGLE LAUNDRY TROLLEY

Nr kat. KL101 040

Transport trolley for laundry
Powder-coated construction with ergonomic handle
120 l sack trolley
Lid made of powder-coated steel
4 wheels Ø 125 mm, 2 with brakes
Equipment:
1x cotton sack

Dimensions (mm)*		
W	D	H
400x500x950 mm		

DOUBLE LAUNDRY TROLLEY

Nr kat. KL102 040

Transport trolley for laundry
Powder-coated construction with ergonomic handle
2 x 120 l sack trolley
2 x lid made of powder-coated steel
4 wheels Ø 125 mm, 2 with brakes
Equipment:
2x cotton sack

Dimensions (mm)*		
W	D	H
700x500x900 mm		

SINGLE TROLLEY FOR THE TRANSPORT of dirty and clean bed linen

Nr kat. KL101 140

Single powder-coated trolley, divided into clean and dirty zones
2 x shelf for clean linen
1 x dirty linen collector with lid
Lid made of powder-coated steel
4 wheels Ø 125 mm, 2 with brakes
Equipment:
1x cotton sack

Dimensions (mm)*		
W	D	H
900x500x1300 mm		

SINGLE TROLLEY FOR THE TRANSPORT of dirty and clean bed lin

Nr kat. KL102 140

Single powder-coated trolley, divided into clean and dirty zones
2 x shelf for clean linen
2 x dirty linen collector with lid
2 x lid made of powder-coated steel
4 wheels Ø 125 mm, 2 with brakes
Equipment:
2x cotton sack

Dimensions (mm)*		
W	D	H
1300x500x1300 mm		

UNIVERSAL TROLLEY FOR BEDDING

Nr kat. KL100 140

Trolley for the transport of clean bed linen
Construction made of powder-coated steel
3 x fixed full shelf
4 wheels Ø 125 mm, 2 with brakes

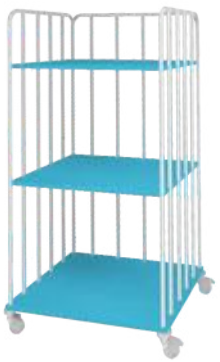

Dimensions (mm)*		
W	D	H
900x600x1650 mm		

* other dimensions available on request
** dimensions of trolley without accessories

METAL MEDICAL TROLLEYS WITH BODY BASED ON ALUMINIUM PROFILE

TREATMENT TROLLEY

Cat. No. KL307 111

Recessed ABS worktop
Handle to guide the trolley
1 x fixed shelf
4 wheels Ø 125 mm, 2 with brakes

	Dimensions (mm)*		
	W	D	H
dim. of trolley	1130x660x990 mm		
Worktop	930x570x30mm		

TREATMENT TROLLEY

Cat. No. KL307 112

Recessed ABS worktop
Handle to guide the trolley
2 x fixed shelf
4 wheels Ø 125 mm, 2 with brakes

	Dimensions (mm)*		
	W	D	H
dim. of trolley	1130x660x990 mm		
Worktop	930x570x30mm		

TREATMENT TROLLEY

Cat. No. KL307 113

Recessed and 3-sided flange ABS worktop
Handle to guide the trolley
1 x fixed shelf
4 wheels Ø 125 mm, 2 with brakes

	Dimensions (mm)*		
	Szer.	Gł.	Wys.
dim. of trolley	1130x660x990 mm		
Worktop	930x570x30mm		

TREATMENT TROLLEY

Cat. No. KL307 114

Recessed and 3-sided flange ABS worktop
Handle to guide the trolley
2 x fixed shelf
4 wheels Ø 125 mm, 2 with brakes

	Dimensions (mm)*		
	W	D	H
dim. of trolley	1130x660x990 mm		
Worktop	930x570x30mm		

TREATMENT TROLLEY

Cat. No. KL307 115

Recessed and 3-sided flange ABS worktop
Handle to guide the trolley
1 x fixed shelf
4 wheels Ø 125 mm, 2 with brakes

	Dimensions (mm)*		
	Szer.	Gł.	Wys.
dim. of trolley	820x660x990 mm		
Worktop	630x570x80mm		

TREATMENT TROLLEY

Cat. No. KL307 116

Recessed and 3-sided flange ABS worktop
Handle to guide the trolley
2 x fixed shelf
4 wheels Ø 125 mm, 2 with brakes

	Dimensions (mm)*		
	W	D	H
dim. of trolley	820x660x990 mm		
Worktop	630x570x80mm		

MEDICAL TROLLEY

Cat. No. KL306 304

Recessed and 3-sided flange ABS worktop
Handle to guide the trolley
1 x full-extension drawer
1 x full door
1 x adjustable shelf
4 wheels Ø 125 mm, 2 with brakes
Accessories: rack with lid for waste bag

	Dimensions (mm)*		
	W	D	H
dim. of trolley	820x660x900 mm		
Worktop	630x570x80mm		

KLAROMED

MEDICALT ROLLEY

Cat. No. KL306 301

Recessed and 3-sided flange ABS worktop
Handle to guide the trolley
4 x full-extension drawer
4 wheels Ø 125 mm, 2 with brakes
Accessories: rack with lid for waste bag

	Dimensions (mm)*		
	W	D	H
dim. of trolley	820x660x990 mm		
Worktop	630x570x80mm		

MEDICALT ROLLEY

Cat. No. KL306 302

Recessed and 3-sided flange ABS worktop
Handle to guide the trolley
Modular rails made of ABS
5 x basket KLDIN01, dim. 538 x 500 x 100 mm
2 x full door
4 wheels Ø 125 mm, 2 with brakes
Accessories: rack with lid for waste bag

	Dimensions (mm)*		
	W	D	H
dim. of trolley	820x660x990 mm		
Worktop	630x570x80mm		

MULTIFUNCTIONAL TROLLEY

Cat. No. KL306 401

Recessed and 3-sided flange ABS worktop
Handle to guide the trolley
2 x full-extension drawer
2 x full door
1 x adjustable shelf
4 wheels Ø 125 mm, 2 with brakes

	Dimensions (mm)*		
	W	D	H
dim. of trolley	820x660x990 mm		
Worktop	630x570x80mm		

TREATMENT TROLLEY

Cat. No. KL309 206

Recessed and 3-sided flange ABS worktop
Handle to guide the trolley
Modular rails made of ABS
3 x basket KLDIN01, dim. 538 x 500 x 100 mm
1 x basket KLDIN02, dim. 580 x 500 x 180 mm
2 x full door
2 x adjustable shelf
4 wheels Ø 125 mm, 2 with brakes

	Dimensions (mm)*		
	W	D	H
dim. of trolley	1130x660x990 mm		
Worktop	930x570x80mm		

BEDDING TROLLEY

Cat. No. KL309 501

Recessed ABS worktop
Handle to guide the trolley
2 x full door
1 x adjustable shelf
4 wheels Ø 125 mm, 2 with brakes

	Dimensions (mm)*		
	W	D	H
dim. of trolley	1130x660x990 mm		
Worktop	930x570x80mm		

TREATMENT TROLLEY

Cat. No. KL309 202

Recessed and 3-sided flange ABS worktop
Handle to guide the trolley
Modular rails made of ABS
2x full door
3x basket KLDIN01, dim. 538x500x100mm
1x basket KLDIN02, dim. 538x500x180mm
3x basket KLDIN04, dim. 268x500x100mm
1x basket KLDIN05, dim. 268x500x180mm
4 wheels Ø 125 mm, 2 with brakes

	Dimensions (mm)*		
	W	D	H
dim. of trolley	1130x660x990 mm		
Worktop	930x570x80mm		

TREATMENT TROLLEY

Cat. No. KL306 402

Recessed and 3-sided flange ABS worktop
Handle to guide the trolley
1 x full-extension drawer
2 x full door
1 x adjustable shelf
4 wheels Ø 125 mm, 2 with brakes

	Dimensions (mm)*		
	W	D	H
dim. of trolley	820x660x990 mm		
Worktop	630x570x80mm		

TREATMENT TROLLEY

Cat. No. KL306 403

Recessed and 3-sided flange ABS worktop
Handle to guide the trolley
2 x full door
1 x adjustable shelf
4 wheels Ø 125 mm, 2 with brakes

	Dimensions (mm)*		
	W	D	H
dim. of trolley	820x660x990 mm		
Worktop	630x570x80mm		

* other dimensions available on request

ACCESSORIES

Cat. No. KLWD01
worktop made of ABS plastic
recessed and 3-sided flange with
a height of 600 mm
Dimensions: 630 x 570 mm

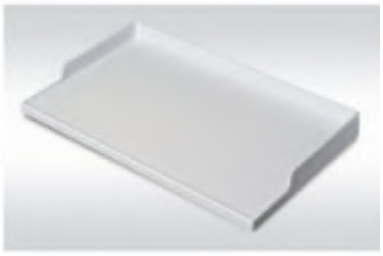

Cat. No. KLWD02
worktop made of ABS plastic
recessed and 3-sided flange with
a height of 600 mm
Dimensions: 930 x 570 mm

Cat. No. KLWD03
recessed worktop made of ABS plastic
Dimensions: 630 x 570 mm

Cat. No. KLWD04
recessed worktop made of ABS plastic
Dimensions: 930 x 570 mm

Cat. No. KLWD05
recessed worktop made of stainless steel
AISI 304 any dimensions

Cat. No. KLWD06
worktop made of stainess steel AISI 304
recessed and 3-sided flange with
a height of 600 mm

Cat. No. KLWD07
Chassis: single wheels of diameter
125 mm, 2 wheels with brakes

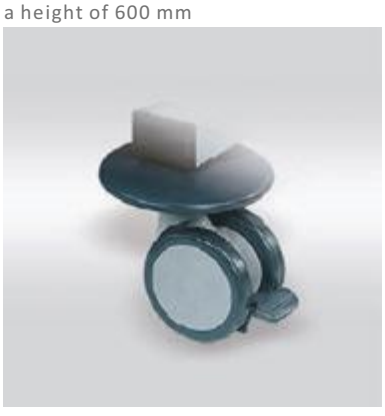

Cat. No. KLWD08
Chassis: double wheels of diameter
125 mm, 2 wheels with brakes

Cat. No. KLWD09
Rack with lid for medical waste
Bag capacity: 10 liters

Cat. No. KLWD10
Waste bin with elbow opening system
Capacity: 8 liters

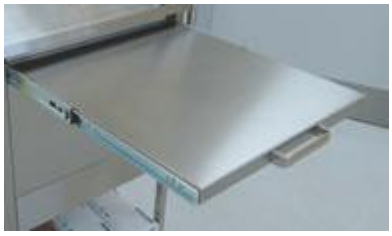

Cat. No. KLWD11
Slid-out side shelf from under the worktop

Cat. No. KLWD12
Foldable side shelf
Dimensions: 400x300 mm

Cat. No.KLWD13
Shelf for defibrillator
Dimensions: 410 x 360 mm
Bearing capacity: 80N/8 kg

Cat. No. KLWD14
Shelf for defibrillator
Dimensions: 420 x 420 mm
Bearing capacity: 80N/8 kg

Cat. No.KLWD15
Handle for a box of disposable gloves

Cat. No. KLWD16
Handle with container for used needles

TRANSPARENT PLASTIC CONTAINERS

Cat. No. KLWD17
Extension with 5 tilt-out plastic containers
Dimension of container: 100x95x145 mm

Cat. No. KLWD18
Extension with 4 tilt-out plastic containers
Dimension of container: 130x125x190 mm

Cat. No. KLWD19
Extension with 3 tilt-out plastic containers
Dimension of container: 175x145x220 mm

Cat. No. KLWD20
Extension with 7 tilt-out plastic containers
Dimension of containers:
175x145x220 mm/ 130x125x190 mm

Cat. No. KLWD21
Extension with 8 tilt-out plastic containers
Dimension of container: 130x125x190 mm

Cat. No. KLWD22
Extension with 9 tilt-out plastic containers
Dimension of containers:
130x125x190 mm/ 100x95x145 mm

Cat. No. KLWD23
Shelf over the worktop made of stainless steel AISI 304
Shelf dimensions: 590x280 mm

Cat. No. KLWD24
Shelf over the worktop made of stainless steel AISI 304 with mounting rack
Shelf dimensions: 590x280 mm

Cat. No. KLWD25
Rail for accessories of usable length 485 mm
Made of stainless steel AISI 304
Capacity: 50N/5kg

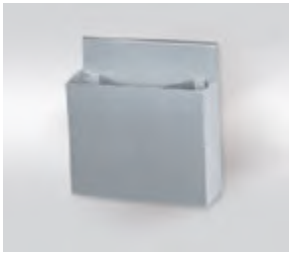

Cat. No. KLWD26
Container for forceps with movable vertical partition inside
Dimensions: 240x80x200 mm

Cat. No. KLWD27
Handle with the holding belt for the oxygen cylinder of 10 l capacity

Cat. No. KLWD28
Container for catheters with movable vertical partition inside
Dimensions: 180x60x500 mm

Cat. No. KLWD29
Dispenser for soap or disinfectant
Dimensions: 80x295x220 mm

Cat. No. KLWD30
Universal container with a lid

Cat. No. KLWD31
Bowl for medical waste of diameter 200 mm
capacity: 3 liters

Cat. No. KLWD32
Basket made of stainless steel AISI 304

Cat. No. KLWD33
Boom with rod endoscope holder
Load capacity 40 N/4kg
Adjustment with a screw mechanism

Cat. No. KLWD34
IV-pole drip boom
2 hooks
Load capacity 40 N/4kg
Adjustment with a screw mechanism

Cat. No. KLWD35
Boom with handle for endoscope
Bearing capacity: 50N/5kg

Cat. No. KLWD36
IV-pole drip boom
4 hooks
Load capacity 40 N/4kg
One-hand boom adjustment by automatic clamping mechanism

Cat. No. KLWD37
Boom with handle for monitor
Bearing capacity: 80N/8kg

Cat. No. KLWD38
An insert for drawer division made of acrylic, with the feature of free configuration of the interior space

Cat. No. KLWD39
4-socket electrical splitter

Cat. No. KLWD40
Resuscitation board

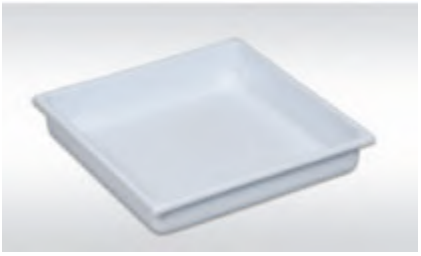

Cat. No. KLWD41
An insert for a low size drawer made of ABS plastic
Dimensions: 460x470x80 mm

Cat. No. KLWD42
An insert for a low size drawer made of ABS plastic, divided into 3 parts
Dimensions: 460x470x80 mm

Cat. No. KLWD43
An insert for a low size drawer made of ABS plastic, divided into 4 parts
Dimensions: 460x470x80 mm

Cat. No. KLWD44
An insert for a medium size drawer made of ABS plastic
Dimensions: 460x470x140 mm

Cat. No. KLWD45
An insert for a medium size drawer made of ABS plastic, divided into 3 parts
Dimensions: 460x470x140mm

Cat. No. KLWD46
Sliding frame for baskets and trays in DIN sizes

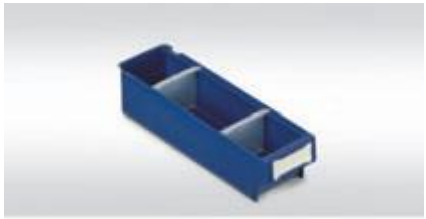

Cat. No. KLWD47
Container for medicines and medical supplies
Dimensions: 115x400x100 mm

Cat. No.. KLWD48
Container for medicines and medical supplies
Dimensions: 230x400x100 mm

METAL MEDICAL TROLLEYS MADE OF STAINLESS STEEL AISI 304

MEDICAL TROLLEY

Cat. No. KL206 001

Worktop made of stainless steel AISI 304
Handle to guide the trolley
1 x full-extension drawer
1 x fixed shelf
4 wheels Ø 125 mm, 2 with brakes

Dimensions (mm)*		
W	Gł.	H
820x660x990 mm		

MEDICAL TROLLEY

Cat. No. KL206 002

Worktop made of stainless steel AISI 304
Handle to guide the trolley
2x full-extension drawer
1 x fixed shelf
4 wheels Ø 125 mm, 2 with brakes

Dimensions (mm)*		
W	D	H
820x660x990 mm		

MEDICAL TROLLEY

Cat. No. KL206 003

Worktop made of stainless steel AISI 304
Handle to guide the trolley
4 x full-extension drawer
4 wheels Ø 125 mm, 2 with brakes

Dimensions (mm)*		
W	D	H
820x660x990 mm		

MEDICAL TROLLEY

Cat. No. KL206 004

Worktop made of stainless steel AISI 304
Handle to guide the trolley
8 x full-extension drawer
4 wheels Ø 125 mm, 2 with brakes

Dimensions (mm)*		
W	D	H
820x660x990 mm		

MEDICAL TROLLEY

Cat. No. KL206 005

Worktop made of stainless steel AISI 304
Handle to guide the trolley
1 x full-extension drawer
2 x full door
1 x adjustable shelf
4 wheels Ø 125 mm, 2 with brakes

Dimensions (mm)*		
W	D	H
820x660x990 mm		

MEDICAL TROLLEY

Cat. No. KL206 010

Worktop made of stainless steel AISI 304
Handle to guide the trolley
2 x full door
2 x adjustable shelf
4 wheels Ø 125 mm, 2 with brakes

Dimensions (mm)*		
W	D	H
820x660x990 mm		

MEDICAL TROLLEY

Cat. No. KL206 006

Worktop made of stainless steel AISI 304
Handle to guide the trolley
4 x full-extension drawer
1 x full door
2 x adjustable shelf
4 wheels Ø 125 mm, 2 with brakes

Dimensions (mm)*		
W	D	H
820x660x990 mm		

MEDICAL TROLLEY

Cat. No. KL206 007

Worktop made of stainless steel AISI 304
Handle to guide the trolley
4 x full-extension drawer
1 x full door
1 x adjustable shelf
4 wheels Ø 125 mm, 2 with brakes

Dimensions (mm)*		
Szer.	Gł.	Wys.
820x660x990 mm		

KLAROMED

MEDICAL TROLLEY

Cat. No. KL206 008

Worktop made of stainless steel AISI 304
Handle to guide the trolley
4 x full-extension drawer
4 wheels Ø 125 mm, 2 with brakes

Dimensions (mm)*		
W	D	H
820x660x990 mm		

MEDICAL TROLLEY

Cat. No. KL206 009

Worktop made of stainless steel AISI 304
Handle to guide the trolley
4 x full-extension drawer
1 x sliding side shelf
4 wheels Ø 125 mm, 2 with brakes

Dimensions (mm)*		
W	D	H
820x660x990 mm		

MEDICAL TROLLEY WITH ACCESSORIES

Cat. No. KL206 011

Recessed worktop made of stainless steel AISI 304
Handle to guide the trolley
2 x full-extension drawer
4 wheels Ø 125 mm, 2 with brakes
Accessories: holder with waste bowl, catheter holder, 2 x rails for accessories, extension with 7 tiltable plastic containers, IV-pole holder, rack with lid for waste bag, holder for used needles container.

Dimensions (mm)*		
W	D	H
820x660x990 mm		

MEDICAL TROLLEY WITH ACCESSORIES

Cat. No. KL206 012

Recessed worktop made of stainless steel AISI 304
Handle to guide the trolley
4 x full-extension drawer
4 wheels Ø 125 mm, 2 with brakes
Accessories: holder with waste bowl, catheter holder, 2 x rails for accessories, extension with 7 tiltable plastic containers, IV-pole holder, rack with lid for waste bag, holder for used needles container.

Dimensions (mm)*		
W	D	H
820x660x990 mm		

MEDICAL TROLLEY WITH ACCESSORIES

Cat. No. KL206 013

Recessed and 3-sided worktop made of stainless steel AISI 304
Handle to guide the trolley
7 x full-extension drawer
4 wheels Ø 125 mm, 2 with brakes
Accessories: holder with waste bowl, catheter holder, 2 x rails for accessories, extension with 7 tiltable plastic containers, IV-pole holder, rack with lid for waste bag, holder for used needles container.

Dimensions (mm)*		
W	D	H
820x660x990 mm		

MEDICAL TROLLEY

Cat. No. KL206 311

Recessed worktop made of stainless steel AISI 304
Handle to guide the trolley
2x full door
2 x adjustable shelf
4 wheels Ø 125 mm, 2 with brakes

Dimensions (mm)*		
W	D	H
820x660x990 mm		

MEDICAL TROLLEY

Cat. No. KL206 111

Recessed and 3-sided worktop made of stainless steel AISI 304
Handle to guide the trolley
2x full door
2 x adjustable shelf
4 wheels Ø 125 mm, 2 with brakes

Dimensions (mm)*		
W	D	H
820x660x990 mm		

MEDICAL TROLLEY

Cat.No. KL206 211

Recessed and 3-sided worktop made of stainless steel AISI 304
Handle to guide the trolley
1 x full-extension drawer
2 x full door
1 x adjustable shelf
4 wheels Ø 125 mm, 2 with brakes

Dimensions (mm)*		
W	D	H
820x660x990 mm		

* other dimensions available on request
** dimensions of trolley without accessories

METAL MEDICAL TROLLEYS MADE OF STAINLESS STEEL AISI 304

TREATMENT TROLLEY

Cat. No. KL207 115

2 x fixed recessed worktop
Handle to guide the trolley
4 wheels Ø 125 mm, 2 with brakes

Dimensions (mm)*		
W	D	H
600x600x900 mm		
800x600x900mm		
900x600x900mm		

TREATMENT TROLLEY

Cat. No. KL207 111

Flat worktop
Handle to guide the trolley
4 wheels Ø 125 mm, 2 with brakes

Dimensions (mm)*		
W	D	H
600x600x900 mm		
800x600x900mm		
900x600x900mm		

Zgodnie z MDD93/42/EEC

TREATMENT TROLLEY

Cat. No. KL207 113

3 x fixed flat worktop
Handle to guide the trolley
4 wheels Ø 125 mm, 2 with brakes

Dimensions (mm)*		
W	D	H
600x600x900 mm		
800x600x900 mm		
900x600x900 mm		

TREATMENT TROLLEY

Cat. No. KL207 112

2 x fixed flat worktop
Handle to guide the trolley
4 wheels Ø 125 mm, 2 with brakes

Dimensions (mm)*		
W	D	H
600x600x900 mm		
800x600x900 mm		
900x600x900 mm		

TREATMENT TROLLEY

Cat. No. KL207 114

Recessed worktop
Handle to guide the trolley
4 wheels Ø 125 mm, 2 with brakes

Dimensions (mm)*		
W	D	H
600x600x900 mm		
800x600x900 mm		
900x600x900 mm		

TABLE FOR SURGICAL INSTRUMENTS

Cat. No. KL208 103

Table for surgical instruments - MAYO type made of stainless steel AISI 304
recessed worktop
worktop : 360 degrees rotatable ,
lock of worktop rotation
Manual adjustment of tabletop height with clamp type lock.
Maximum load capacity: 30 kg
3 wheels Ø 50 mm with brakes

Dimensions (mm)*		
W	D	H
620x410x920-1380 mm		
750x500x920-1380 mm		

TABLE FOR SURGICAL INSTRUMENTS

Cat. No. KL208 113

Table for surgical instruments - MAYO type made of stainless steel AISI 304
recessed worktop
worktop: 360 degrees rotatable ,
ock of worktop rotatation
Hydraulic height adjustment of the worktop via a foot operated lever
Maximum load capacity: 40 kg
3 wheels Ø 50 mm with brakes

Dimensions (mm)*		
W	D	H
620x410x920-1380 mm		
750x500x920-1380 mm		

TABLE FOR HAND SURGERY

Cat. No. KL208 143

Table for surgery procedures performed on patent hands made of stainless steel AISI 304
recessed worktop
worktop: 360 degrees rotatable , lock of worktop rotation
Manual adjustment of tabletop height with clamp type lock.
Basis diameter: 600 mm

Dimensions (mm)*		
W	D	H
500x350x800-1200 mm		

SURGICAL SINGLE-STEP PLATFORM

Cat.No. KL208 302

Surgical single-step platform made of stainless steel AISI 304
Legs with level control
The platform is made of anti-slip sheet

Dimensions (mm)*		
W	D	H
500x300x150 mm		
500x300x200 mm		
500x300x300 mm		

SURGICAL DOUBLE-STEP PLATFORM

Cat.No. KL208 312

Surgical double-step platform made of stainless steel AISI 304
Legs with level control
The platform is made of anti-slip sheet

Wymiary (mm)*		
W	D	H
500x650x420 mm		

STAND WITH A BOWL

Cat. No. KL208 201

Stand with a bowl for waste
Made of stainless steel AISI 304
Removable bowl with a capacity of 3 l or 6 l
5 wheels Ø 50 mm with brakes

Dimensions (mm)*		
W	D	H
600x600x900 mm		

STAND WITH TWO BOWLS

Cat.No. KL208 202

Stand with two bowls for waste
Made of stainless steel AISI 304
Removable bowl with a capacity of 3 l or 6 l
5 wheels Ø 50 mm with brakes

Dimensions (mm)*		
W	D	H
600x600x900 mm		

HEATER OF INFUSION FLUIDS

Cat. No. KL208 207 - Manual control
Cat. No. KL208 208 - Electronic control

Heater of infusion fluids on a stand
with the fixed height.
Two versions of temperature adjustment:
- Electronic control
- Manual control

Dimensions (mm)*		
W	D	H
600x600x1150mm		

HEATER OF INFUSION FLUIDS

Cat. No. KL208 205 - Manual control
Cat. No. KL208 206 - Electronic control

Stojak podgrzewacz do płynów
infuzyjnych z ręczną regulacją
wysokościw dwóch wersjach regulacji
temperatury:
- sterowanie elektroniczne,
- sterowanie ręczne.

Dimensions (mm)*		
W	D	H
600x600x950-1350 mm		

HEATER OF INFUSION FLUIDS

Cat. No. KL208 203 - Manual control
Cat. No. KL208 204 - Electronic control

Heater of infusion fluids on a stand with
hydraulic adjustable height. Two versions of
temperature adjustment:
- Electronic control
- Manual control

Dimensions (mm)*		
W	D	H
600x600x950-1350 mm		

BUCKET

Cat.No. KL208 304

Mobile basis
Removable bucket with a capacity of 10 liters
4 wheels Ø 50 mm, 2 with brakes

Dimensions (mm)*	
handle length	cap. of bucket
750 mm	10 L.

* other dimensions available on request

SURGICAL CHAIR

Cat. No. KL208 405

Surgical chair with a backrest
Five-arm basis made of stainless steel AISI 304
Hydraulic height adjustment via a foot operated lever
Seat Ø 360 mm
5 wheels Ø 50 mm,with brakes
Optional equipment: support for legs

Dimensions (mm)*		
W	D	H
600x600x440-620 mm		

SURGICAL CHAIR

Cat.No. KL208 404

Surgical chair with a backrest
Five-arm basis made of stainless steel AISI 304
Height adjustment via a gas spring with lock
Seat Ø 360 mm
5 wheels Ø 50 mm with brakes
Optional equipment: support for legs

Wymiary (mm)*		
W	D	H
600x600x440-580 mm		

SURGICAL STOOL

Cat. No. KL208 403

Surgical stool
Five-arm basis made of stainless steel AISI 304
Hydraulic height adjustment via a foot
operated lever
Seat Ø 360 mm
5 wheels Ø 50 mm with brakes
Optional equipment: support for legs

Dimensions (mm)*		
W	D	H
600x600x440-620 mm		

SURGICAL STOOL

Cat. No. KL208 402

Surgical stool
Five-arm basis made of stainless steel AISI 304
Height adjustment via a gas spring with lock
Seat Ø 360 mm
5 wheels Ø 50 mm with brakes
Optional equipment: support for legs

Dimensions (mm)*		
W	D	H
600x600x440-580 mm		

SURGICAL STOOL

Cat. No. KL208 406

Surgical stool with a seat of the "saddle" type
Five-arm basis made of stainless steel AISI 304
Height adjustment via a gas spring with lock
5 wheels Ø 50 mm with brakes

Dimensions (mm)*		
W	D	H
600x600x440-580 mm		

AVAILABLE COLOURS OF THE UPHOLSTERY of chairs and stools:

white
grey
orange
black
yellow
salmon orange
red
turquoise
pastel green
blue

DRIP STAND
made of stainless steel AISI 304

Cat. No. KL208 301 clamping screw
Cat. No. KL208 311 automatic clamp

Mobile IV-Pole with 2 or 4 hooks.
Height adjustment of the stand with screw or automatic
clamping system (one-hand operation).
Stand and extension arm made of stainless steel AISI 304.
5 wheels Ø 50 mm, 2 with brakes
Load capacity 1 hook: 2 kg

	Dimensions (mm)*		
	W	D	H
KL 208 301	600x600x1300-2000 mm		
KL 208 311	600x600x1300-2000 mm		

DRIP STAND
made of stainless steel AISI

Cat. No. KL108 301 clamping screw
Cat. No. KL108 311 automatic clamp

Mobile IV-Pole with 2 or 4 hooks.
Height adjustment of the stand with screw or automatic clamping system (one-hand operation).
Stand made of powder-coated steel and extension arm made of stainless steel AISI 304.
5 wheels Ø 50 mm, 2 with brakes
Load capacity 1 hook: 2 kg

	Dimensions (mm)*		
	W	D	H
KL 108 301	600x600x1300-2000 mm		
KL 108 311	600x600x1300-2000 mm		

TRANSPORT TROLLEY

Cat. No. KL207 101

Transport trolley for medical supplies and surgical instruments
Removable container made of stainless steel AISI 304 type G1/3
Removable worktop
Ergonomic handle
4 wheels Ø 125 mm, 2 with brakes

Dimensions (mm)*		
W	D	H
750x380x850 mm		

TRANSPORT TROLLEY

Cat. No. KL207 102

Transport trolley for medical supplies and surgical instruments
1 x removable container made of stainless steel AISI 304, type G1/3
1 x removable container made of stainless steel AISI 304, type G2/3
Ergonomic handle
4 wheels Ø 125 mm, 2 with brake

Dimensions (mm)*		
W	D	H
750x380x850 mm		

TRANSPORT TROLLEY

Cat. No. KL207 103

Transport trolley for medical supplies and surgical instruments
3 x removable container made of stainless steel AISI 304, type G1/3
Ergonomic handle
4 wheels Ø 125 mm, 2 with brakes

Dimensions (mm)*		
W	D	H
750x380x850 mm		

TRANSPORT TROLLEY

Cat. No. KL207 104

Transport trolley for medical supplies distribution
2 x container type KLWD511 made of plastic with lid
Ergonomic handle
4 wheels Ø 125 mm, 2 with brakes

Dimensions (mm)*		
W	D	H
650x450x850 mm		

TRANSPORT TROLLEY

Cat. No. KL207 105

Transport trolley for medical supplies distribution
2 x container type KLWD512 made of plastic with lid with patent lock
Ergonomic handle
4 wheels Ø 125 mm, 2 with brakes

*plastic containers are optional accessories

Dimensions (mm)*		
W	D	H
1250x650x850 mm		

TRANSPORT TROLLEY

Cat. No. KL207 202

Transport trolley - platform type
Ergonomic handle
4 wheels Ø 125 mm, 2 with brakes

Dimensions (mm)*		
W	D	H
700x600x850 mm		
800x600x850 mm		
900x600x850 mm		

TRANSPORT TROLLEY

Cat. No. KL200 102

Trolley for sterile and dressing supplies
Ergonomic handle
4 wheels Ø160 mm, 2 with brakes
2 x full door with opening angle 270°, lockable
2 x adjustable shelf
Dimensions (mm)*

Dimensions (mm)*		
W	D	H
680x680x1240 mm		
880x680x1240mm		
1180x680x1240mm		

TRANSPORT TROLLEY

Cat. No. KL208 701

Trolley for transport of contaminated medical materials with a lockable lid and a tap for drain
Ergonomic handle
4 wheels Ø 160 mm, 2 with brakes

Dimensions (mm)*		
W	D	H
900x600x1200 mm		
1000x600x1200 mm		
1200x600x1200 mm		

TRANSPORT TROLLEY

Cat. No. KL200 405

Transport trolley - platform type for carrying of baskets
Ergonomic handle
4 wheels Ø 125 mm, 2 with brakes

Dimensions (mm)*		
W	D	H
650x450x800 mm		

TROLLEY FOR CATERING

Cat. No. KL208 801

Trolley for catering
4 x container, type G 1/3 200
1 x container, type G 2/3 200
Foldable shelf for plates, two-door cupboard under the worktp, open space with one adjustable shelf under the ergonomic handle
Ergonomic handle
4 wheels Ø 125 mm, 2 with brakes

Dimensions (mm)*		
W	D	H
900x600x900 mm		

TRANSPORT TROLLEY

Cat. No. KL200 101

Trolley for transport and storage of paper and nonwovens
Ergonomic handle
4 wheels Ø 125 mm, 2 with brakes

Dimensions (mm)*		
W	D	H
1100x450x980 mm		

TRANSPORT TROLLEY

Cat. No. KL200 404

Trolley for transport of
6 single-sized baskets or 12 half-sized baskets, that comply with ISO norm
Ergonomic handle
4 wheels Ø 125 mm, 2 with brakes

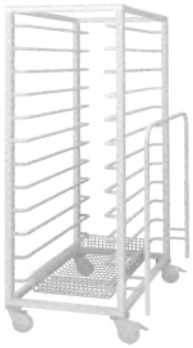

Dimensions (mm)*		
W	D	H
460x660x1550 mm		

TRANSPORT TROLLEY

Cat. No. KL200 403

Trolley for transport of
6 single-sized baskets or 12 half-sized baskets, that comply with ISO norm
Ergonomic handle
4 wheels Ø 125 mm, 2 with brakes

Dimensions (mm)*		
W	D	H
890x660x860 mm		

TRANSPORT TROLLEY

Cat. No. KL200 940

Trolley for transport of baskets and trays, that comply with ISO norm
Ergonomic handle
4 wheels Ø 125 mm, 2 with brakes

* baskets / trays are optional accessories

Dimensions (mm)*		
W	D	H
1120x630x1500 mm		

TROLLEY FOR BEDDING

Cat. No. KL207 301

Trolley for clean and dirty laundry transport
Ergonomic handle
1 x full door
2 x adjustable shelf
1 x rack for a bag with the cap. 120 l
4 wheels Ø 125 mm, 2 with brakes

Dimensions (mm)*		
W	D	H
1000x420x1100 mm		

TROLLEY FOR BEDDING

Cat. No. KL207 311

Trolley for clean and dirty laundry transport
Ergonomic handle
1 x full door
2 x adjustable shelf
1 x rack with lid for a bag of cap. 120 l
lid openable via foot operated lever
4 wheels Ø 125 mm, 2 with brakes

Dimensions (mm)*		
W	D	H
1000x420x1100 mm		

SINGLE TROLLEY FOR WASTE

Cat. No. KL208 101

Mobile rack for medical waste
1 x rack for a bag with the capacity of 60 l or 120 l
4 wheels Ø 50 mm, 2 with brakes

Dimensions (mm)*		
W	D	H
340x340x700 mm		
390x420x860 mm		

SINGLE TROLLEY FOR WASTE

Cat. No. KL208 111

Mobile rack for medical waste with a lid
1 x rack for a bag of 60 or 120 litres capacity with a lid openable via foot operated lever
4 wheels Ø 50 mm, 2 with brakes

Dimensions (mm)*		
W	D	H
340x340x700 mm		
390x420x860 mm		

DOUBLE TROLLEY FOR WASTE

Cat. No. KL208 102

Double mobile rack for medical waste
2 x rack for a bag with the capacity of 60 l or 120 l
4 wheels Ø 50 mm, 2 with brakes

Dimensions (mm)*		
W	D	H
680x340x700 mm		
780x420x860 mm		

DOUBLE TROLLEY FOR WASTE

Cat. No. KL208 112

Double mobile rack for medical waste with two lids
2 x rack for a bag of 60 or 120 litres capacity with a lid openable via foot operated lever
4 wheels Ø 50 mm, 2 with brakes

Dimensions (mm)*		
W	D	H
680x340x700 mm		
780x420x860 mm		

SINGLE TROLLEY FOR THE TRANSPORT of dirty and clean bedlinen

Cat. No. KL201 140

Single trolley divided into clean and dirty zones
2 x shelf for clean linen
1 x dirty linen collector with lid
4 wheels Ø 125 mm, 2 with brakes
Equipment:
1x cotton sack

Dimensions (mm)*		
W	D	H
900x500x1300 mm		

DOUBLE TROLLEY FOR THE TRANSPORT of dirty and clean bedlinen

Cat. No. KL202 140

Single trolley divided into clean and dirty zones
2 x shelf for clean linen
2 x dirty linen collector with lid
4 wheels Ø 125 mm, 2 with brakes
Equipment:
2x cotton sack

Dimensions (mm)*		
W	D	H
1300x500x1300 mm		

SINGLE LAUNDRY TROLLEY

Cat. No. KL201 040

Transport trolley for laundry
Ergonomic handle
1 x 120 l sack
1 x lid
4 wheels Ø 125 mm, 2 with brakes
Equipment:
1 x cotton sack

Dimensions (mm)*		
W	D	H
400x500x950 mm		

DOUBLE LAUNDRY TROLLEY

Cat. No. KL202 040

Transport trolley for laundry
Ergonomic handle
2 x 120 l sack
2 x lid
4 wheels Ø 125 mm, 2 with brakes
Equipment:
2 x cotton sack

Dimensions (mm)*		
W	D	H
700x500x900 mm		

SINGLE SCREEN

Cat. No. KL208 313

Single screen
Frame and base made of stainless steel AISI 304
Filling made of milky and light-trans

Dimensions (mm)*		
W	D	H
900x500x1800 mm		

SINGLE SCREEN

Cat. No. KL108 313

Single screen
Frame and base made of powder-coated steel
Filling made of milky and light-transmitting plastic
Easy to clean and disinfect
4 wheels Ø 50 mm with brakes

Dimensions (mm)*		
W	D	H
900x500x1800 mm		

DOUBLE SCREEN

Cat. No. KL208 323

Double screen
Frame and base made of stainless steel AISI 304
Filling made of milky and
light-transmitting plastic
Easy to clean and disinfect
4 wheels Ø 50 mm with brakes

Dimensions (mm)*		
W	D	H
1800x500x1800 mm		

DOUBLE SCREEN

Cat. No. KL108 323

Double screen
Frame and base made of powder-coated steel
Filling made of milky and
light-transmitting plastic
Easy to clean and disinfect
4 wheels Ø 50 mm with brakes

Dimensions (mm)*		
W	D	H
1800x500x1800 mm		

TRIPLE SCREEN

Cat. No. KL208 333

Triple screen
Frame and base made of stainless steel AISI 304
Filling made of milky and light-transmitting plastic
Easy to clean and disinfect
4 wheels Ø 50 mm with brakes

Dimensions (mm)*		
W	D	H
2700x500x1800 mm		

TRIPLE SCREEN

Cat. No. KL108 333

Triple screen
Frame and base made of powder-coated steel
Filling made of milky and light-transmitting plastic
Easy to clean and disinfect
4 wheels Ø 50 mm with brakes

Dimensions (mm)*		
W	D	H
2700x500x1800 mm		

UNIVERSAL TROLLEY FOR BEDDING

Cat. No. KL200 140

Trolley for the transport of clean bed linen
Construction made of stainless steel
AISI 304
3 x fixed full shelf
4 wheels Ø 125 mm, 2 with brakes

Dimensions (mm)*		
W	D	H
900x600x1650 mm		

* Custom product / order over 5 required.

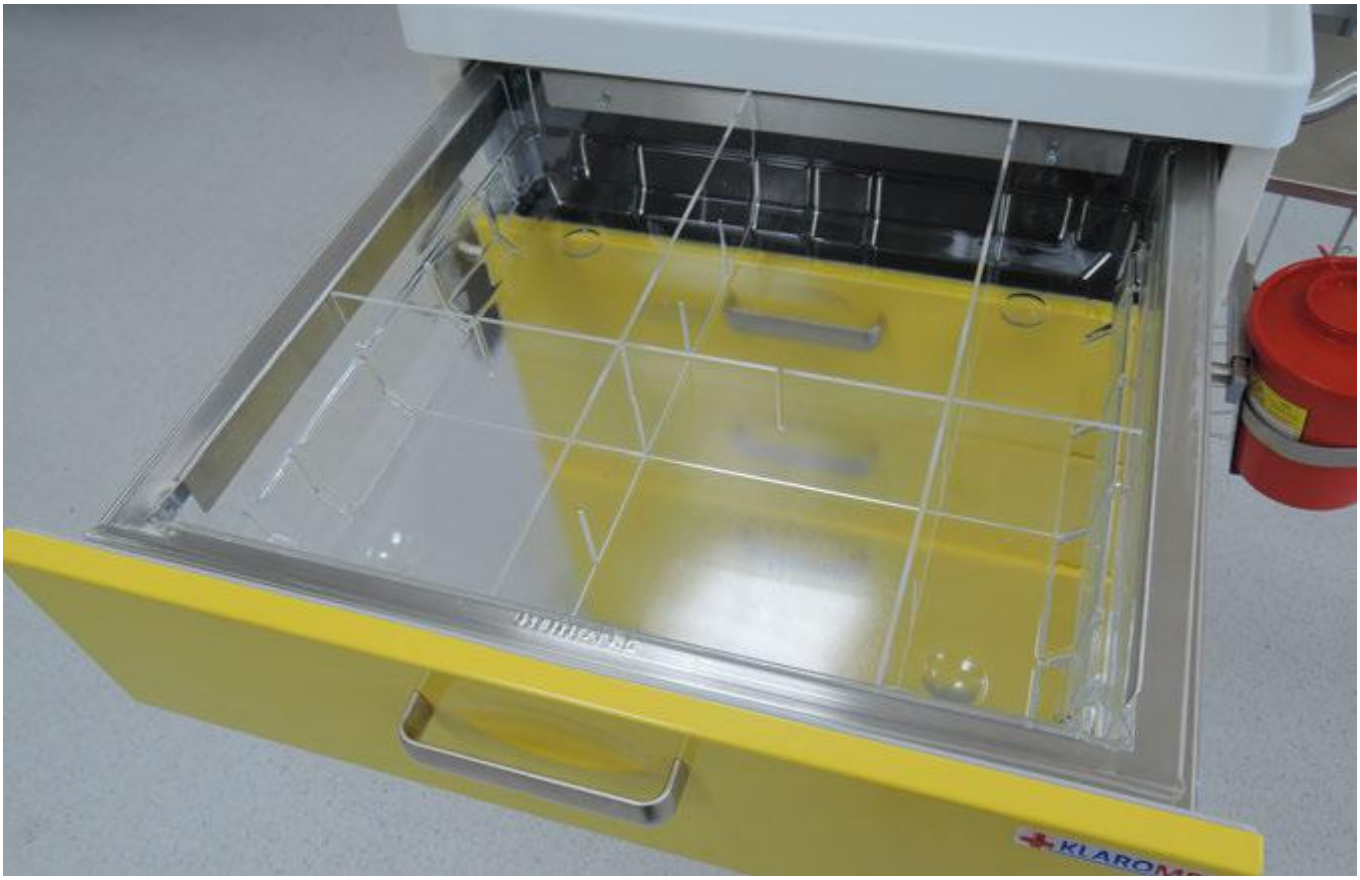

NOTES

We invite you to cooperation.

KLAROMED

Quality Management System
EN ISO
13485:2016

KLAROMED Sp. z o. o.
123 Sobieskiego str.
PL-05070 Sulejówek
Poland

phone +48 22 299 30 40
klaromed@klaromed.pl

All information in this document is subject to change without notice.
No part of this study may be copied or transmitted in any form
and in any way without written consent. All brands, names and product names included herein
document are trademarks or registered trademarks. Commercial information
included in the document do not constitute an offer within the meaning of the Polish Civil Code
(Art. 66 of the Civil Code, Art. 543 of the Civil Code), but they are an invitation to submit purchase offers.

PL/30.06.20222
© KLAROMED Sp. z o. o.
Wszelkie prawa zastrzeżone.

klaromed.pl